CORRESPONDENCE COVER SHEET
WASTE PERMITS DIVISION
TEXAS COMMISSION ON ENVIRONMENTAL QUALITY

Date: 06/22/2022
Facility Name: City of Del Rio Landfill
Permit or Registration No.: MSW 207B

Nature of Correspondence:
☐ Initial/New
☒ Response/Revision*

*If Response/Revision, please provide previous TCEQ Tracking No.: 25811196
(Previous TCEQ Tracking No. can be found in the Subject line of the TCEQ's response letter to your original submittal.)

This cover sheet should accompany all correspondences submitted to the Waste Permits Division and should be affixed to the front of your submittal as a cover page. Please check the appropriate box for the type of correspondence being submitted. For questions regarding this form, please contact the Waste Permits Division at (512) 239-2335.

Table 1 - Municipal Solid Waste

APPLICATIONS	REPORTS and RESPONSES
☐ New Notification	☐ Closure Report
☐ New Permit (including Subchapter T)	☐ Groundwater Alternate SRC Demonstration
☐ New Registration (including Subchapter T)	☐ Groundwater Corrective Action
☒ Major Amendment	☐ Groundwater Monitoring Report
☐ Minor Amendment	☐ Groundwater Statistical Evaluation
☐ Limited Scope Major Amendment	☐ Landfill Gas Corrective Action
☐ Notice Modification	☐ Landfill Gas Monitoring
☐ Non-Notice Modification	☐ Liner Evaluation Report
☐ Transfer/Name Change Modification	☐ Soil Boring Plan
☐ Temporary Authorization	☐ Special Waste Request
☐ Voluntary Revocation	☐ Other:
☐ Subchapter T Workplan	
☐ Other:	

Table 2 - Industrial & Hazardous Waste

APPLICATIONS	REPORTS and RESPONSES
☐ New	☐ Annual/Biennial Site Activity Report
☐ Renewal	☐ CfPT Plan/Result
☐ Post-Closure Order	☐ Closure Certification/Report
☐ Major Amendment	☐ Construction Certification/Report
☐ Minor Amendment	☐ CPT Plan/Result
☐ Class 3 Modification	☐ Extension Request
☐ Class 2 Modification	☐ Groundwater Monitoring Report
☐ Class 1 ED Modification	☐ Interim Status Change
☐ Class 1 Modification	☐ Interim Status Closure Plan
☐ Endorsement	☐ Soil Core Monitoring Report
☐ Temporary Authorization	☐ Treatability Study
☐ Voluntary Revocation	☐ Trial Burn Plan/Result
☐ 335.6 Notification	☐ Unsaturated Zone Monitoring Report
☐ Other:	☐ Waste Minimization Report
	☐ Other:

June 22, 2022

Sarah Welborn, P.G.
MC-109
Texas Commission on Environmental Quality
12100 Park 35 Circle
Austin, TX 78753

Re: Response to Technical Notice of Deficiency
City of Del Rio
Del Rio, Val Verde County, Texas
Proposed Municipal Solid Waste Permit No: 207B
Tracking No. 25811196; RN102143294/CN600756290
Major Permit Amendment Application

Dear Ms. Welborn:

On behalf of the City of Del Rio CP&Y, Inc. is submitting a response to technical notice of deficiency (NOD) for the referenced permit amendment application. The replacement pages enclosed have been updated to incorporate comments included in the NOD letter dated June 9, 2022.

To facilitate your review, the NOD Table with the comments and response is enclosed. If you have any questions, please do not hesitate to contact me.

Sincerely,

Tewobista Metaferia

Tewobista Metaferia, P.E.
Project Engineer
CP&Y, Inc.

cc: Alberto Quintanilla, P.E.
TCEQ Region 16

1820 Regal Row, Suite 200
Dallas, Texas 75235

(p) 214.638.0500 • (f) 214.638.3723
www.cpyi.com

Technical NOD #7

--	App. Part	App. Section	Citation	Location	NOD Type	NOD Description/Resolution
T1	290	Part III	330.305(a)	IIIH-1, 7, 9	Ambiguous	Explain the relationship between "Discharge Point 1" in Table 4-1, “Volume at Pond" on page IIIH-A-99 and "Volume at Discharging into Pond" on page IIIH-B-113. Ensure that each discharge point from the facility is evaluated and presented.
						Page IIIH-A-99 and IIIH-B-113 were revised in NOD 4 to ensure that the volume discharging from the facility is evaluated at the same point for existing and proposed conditions as presented in Table 4-1 and Figure IIIH.1.
T2	290	Part III	330.305(a)	IIIH-1, 7, 9	Incomplete	Provide a figure to illustrate the entire northeast side of the facility. Include the permit boundary, limit of waste, perimeter road, perimeter stormwater channel, low water crossing, and the 30-foot gas pipeline easement. The figure should be at a scale that allows distinction of all these features.
						Figure IIIH.12 has been updated to show the entire northeast side of the facility. Figure IIIH.13 has been added to provide additional cross sections for the northeast side.
T3	296	Part III	330.305(e)	IIIH-2	Incomplete	Expand discussion of drainage feature designs to clarify the adequacy of the swale design shown in Detail D on Figure IIIH.3 for all swales. Page IIIH-D-1 indicates that typical drainage areas are analyzed on sheet IIIH-D-2. Explain how these drainage areas were chosen to provide a conservative demonstration or provide a demonstration for all drainage areas.
						Detail D on Figure IIIH.3 has been updated to include a detail for the swales on the top slope. The notes have been updated to include text that state the side slopes of the landfill range from 20 to 20% to 25% as shown on Figure IIIH.3 from the 6th NOD submittal. Page IIID-D-1 has been updated to include the following text: "The swales analyzed on sheet IIIH-D-2 were selected to include the swales that have the largest drainage area on the top slope (SW1) and side slope (SW3). All swales will be constructed to be a minimum of 2 feet tall as shown in Detail D on Figure IIIH.3. As mentioned above the maximum normal depth is 1.43 feet therefore the 2 feet swale will be adequate for all the swale drainage areas."

Technical NOD #7

--	App. Part	App. Section	Citation	Location	NOD Type	NOD Description/Resolution
T4	305	Part III	330.63(c)(1)(B)	IIIH	Omitted	Review Figures IIIH-C.10 through IIIH-C.15. Ensure that more than 1 cross-section is provided for any channel (see Channel 4). Ensure that cross-section locations are shown (see Channel 5). Ensure that 25-year storm water elevations in the channels match those shown in the cross-sections (see Channel 2, cross-sections B and C, where water elevations on cross-sections appear to be about 0.5 feet lower than illustrated on the channel profile and there is little room for error as illustrated in the cross-sections). Explain any considerations made for freeboard (see Channel 4, cross-section A, which appears to have about 0.2 feet of channel depth above the design storm flow, and cross-sections B and C for Channel 2).
						Figure IIIH-C.13 has been updated to include an additional cross section for Channel 4. In addition, the channel berm has been revised to provide a minimum of 0.5 feet of freeboard in the channel. The cross-section locations for Channel 5 have been added. In addition the channel berm has been regarded so that 0.5 freeboard is provided. Channel 2 profile slopes have been updated to provide a minimum of 0.5 feet of freeboard. In addition, the profile and cross sections have been reviewed for consistency. All the figures have been reviewed to ensure that (1) more than one cross section is provided for each channel, (2) cross section locations are shown on the channel profile, (3) channel profile match the cross section, and (4) a minimum feet of freeboard is provided for all channels.
T5	377	Part III	330.335	IIIK	Incorrect	Review data in Tables 6-3 and 6-4, text Section 8, and HELP model summary tables, and revise for consistency with the input and output values in the HELP and Multimed models.

Technical NOD #7

--	App. Part	App. Section	Citation	Location	NOD Type	NOD Description/Resolution
						The data in Tables 6-3 and 6-4, text Section 8, and HELP model summary tables have been revise for consistency with the input and output values in the HELP and Multimed models. Table 6-3 (page IIIK-10) -Infiltration rate revised to match HELP output -Area of disposal revised to match the rounded value provided by the MULTIMED. Table 6-4 (page IIIK-11) -Organic carbon content revised to match MULTIMED model. Table 6-5 (page IIIK-11) was updated to match the new output values of MULTIMED based on the updated infiltration rate.
T6	377	Part III	330.335	IIIN	Omitted	Revise the last paragraph of Section 6.1.2 to indicate the location in the final cover plan specifying that the facility will maintain a minimum 60 percent vegetation coverage on intermediate cover, consistent with the assumptions used in the HELP models in Appendix IIIK.
						The text in Section 6.1.2 in Appendix IIIN and page IIIK-A-1 have been revised to add references to other parts of the application.
T7	377	Part III	330.335	IIIN	Incomplete	Review data in Table 6-3 and revise for consistency with the input and output values in the HELP and Multimed models.
						The data in the following tables have been revised for consistency with the input and output values in the HELP and Multimed models. Table 6-3 (page IIN-14) -Infiltration rate revised to match HELP output -Area of disposal revised to match the rounded value provided by the MULTIMED. Table 6-6 (page IIN-16) -Organic carbon content revised to match MULTIMED model. Table 6-7 (page IIN-17) was updated to match the new output values of MULTIMED based on the updated infiltration rate.

CITY OF DEL RIO LANDFILL

VAL VERDE COUNTY, TEXAS
TCEQ PERMIT NO. MSW-207B

MAJOR PERMIT AMENDMENT APPLICATION

TCEQ PART I APPLICATION FORM, CORE DATA FORM, AND MAILING LABELS

Prepared for
City of Del Rio

October 2020
Revision 1 January 2021
Revision 2 May 2021
Revision 3 September 2021
Revision 4 October 2021
Revision 5 January 2022
Revision 6 March 2022
Revision 7 May 2022
Revision 8 June 2022

Prepared by

CP&Y Inc
TPBE Registration No. F-1741
1820 Regal Row, Suite 200
Dallas, TX 75235
214-638-0500

This document is intended for permitting purposes only.

CITY OF DEL RIO LANDFILL

VAL VERDE COUNTY, TEXAS
TCEQ PERMIT NO. MSW-207B

MAJOR PERMIT AMENDMENT APPLICATION

TCEQ PART I APPLICATION FORM, CORE DATA FORM, AND MAILING LABELS

CONTENTS

PART I FORM

Signature Page

I, John A. Sheedy, IV, City Manager,
(Site Operator (Permittee/Registrant)'s Authorized Signatory) (Title)

certify under penalty of law that this document and all attachments were prepared under my direction or supervision in accordance with a system designed to assure that qualified personnel properly gather and evaluate the information submitted. Based on my inquiry of the person or persons who manage the system, or those persons directly responsible for gathering the information, the information submitted is, to the best of my knowledge and belief, true, accurate, and complete. I am aware there are significant penalties for submitting false information, including the possibility of fine and imprisonment for knowing violations.

Signature: ____________ Date: 6/22/2022

- -

TO BE COMPLETED BY THE OPERATOR IF THE APPLICATION IS SIGNED BY AN AUTHORIZED REPRESENTATIVE FOR THE OPERATOR

I, ____________________, hereby designate ________________________
(Print or Type Operator Name) (Print or Type Representative Name)

as my representative and hereby authorize said representative to sign any application, submit additional information as may be requested by the Commission; and/or appear for me at any hearing or before the Texas Commission on Environmental Quality in conjunction with this request for a Texas Water Code or Texas Solid Waste Disposal Act permit. I further understand that I am responsible for the contents of this application, for oral statements given by my authorized representative in support of the application, and for compliance with the terms and conditions of any permit which might be issued based upon this application.

____
Printed or Typed Name of Operator or Principal Executive Officer

____
Signature

- -

SUBSCRIBED AND SWORN to before me by the said John A. Sheedy, IV

On this 22nd day of June, 2022

My commission expires on the 23rd day of December 2024

____
Notary Public in and for

Val Verde County, Texas

(Note: Application Must Bear Signature & Seal of Notary Public)

ANA MARIA GIRALDO
Notary Public, State of Texas
Comm. Expires 12-23-2024
Notary ID 123965502

CITY OF DEL RIO LANDFILL

VAL VERDE COUNTY, TEXAS
TCEQ PERMIT NO. MSW-207B

MAJOR PERMIT AMENDMENT APPLICATION
PART III — SITE DEVELOPMENT PLAN

APPENDIX IIIH
SURFACE WATER DRAINAGE PLAN

Prepared for

City of Del Rio

October 2020
Revision 1 May 2021
Revision 2 October 2021
Revision 3 January 2022
Revision 4 March 2022
Revision 5 May 2022
Revision 6 June 2022

Prepared by
CP&Y Inc
TPBE Registration No. F-1741
1820 Regal Row, Suite 200
Dallas, TX 75235
214-638-0500

This document is intended for permitting purposes only.

TABLE OF CONTENTS

APPENDICES

APPENDIX IIIH-A – Permitted Condition Hydrologic Calculations

APPENDIX IIIH-B – Post-Development Condition Hydrologic Calculations

APPENDIX IIIH-C – Channel, Containment and Diversion Berm Design

APPENDIX IIIH-D – Final Cover Erosion Control Structure Design

APPENDIX IIIH-E – Erosion Layer Evaluation

DRAWINGS

- IIIH.1 – SITE DRAINAGE PATTERN RUNON/RUNOFF
- IIIH.2 – DRAINAGE STRUCTURE PLAN
- IIIH.3 – DRAINAGE DETAILS I
- IIIH.4 – DRAINAGE DETAILS II
- IIIH.5 – DRAINAGE DETAILS III
- IIIH.6 – DRAINAGE DETAILS VI
- IIIH.7 – EROSION CONTROL DETAILS
- IIIH.8 – Pond 1 Outlet Structure
- IIIH.9 – Pond 1 Cross Sections A and B
- IIIH.10 – Pond 2 Outlet Structure
- IIIH.11 – Pond 2 Cross Sections C and D
- IIIH.12 – Cross Section E
- IIIIH.13 – Cross Section F and G

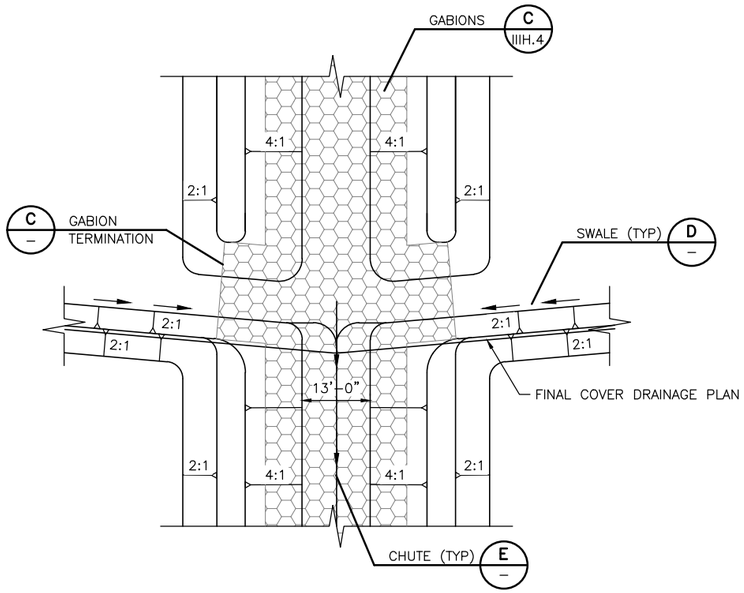

A SWALE/CHUTE CONFLUENCE (TYP)
NTS

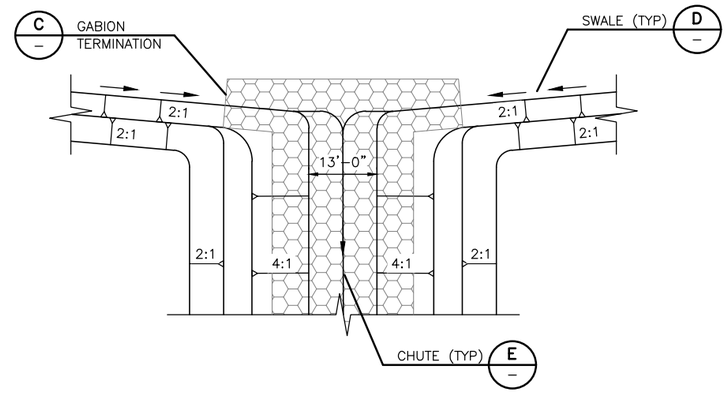

B SWALE/CHUTE CONFLUENCE (TYP)
NTS

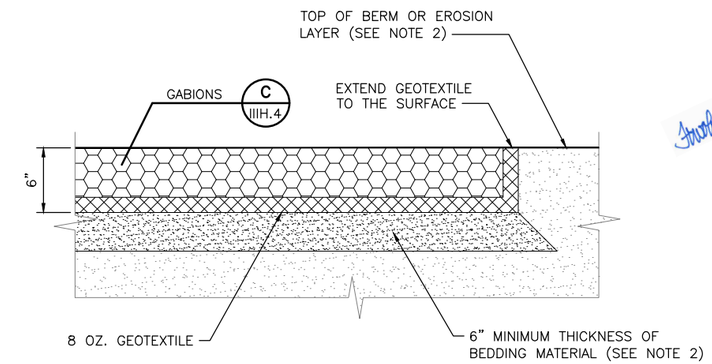

C GABION TERMINATION
NTS

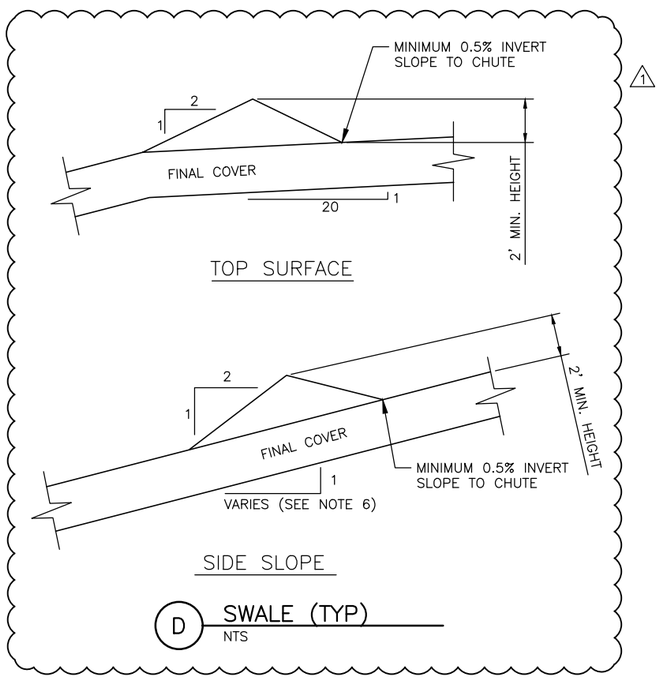

D SWALE (TYP)
NTS

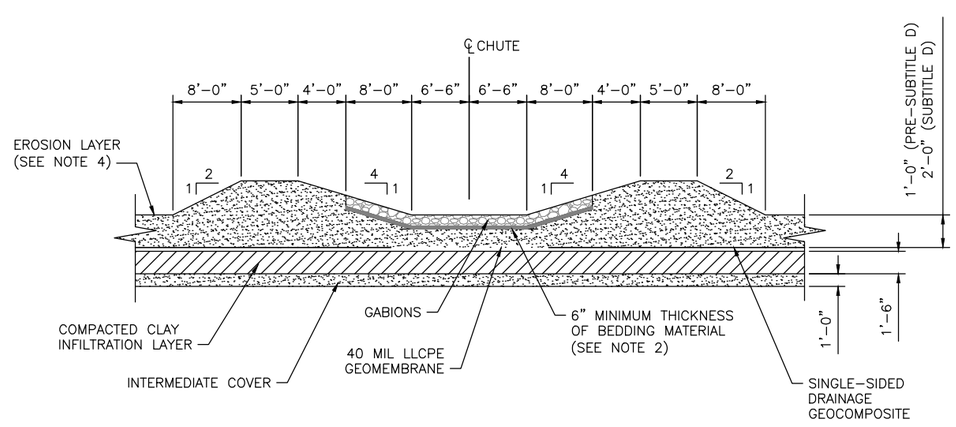

E CHUTE DETAIL
NTS

NOTES:

1. REFER TO DRAWING IIIH.2 DRAINAGE STRUCTURE PLAN FOR LOCATION OF DETAILS.
2. BEDDING MATERIAL WILL CONSIST OF CLAYEY SOILS COMPACTED TO PROVIDE FIRM BASE THAT WILL OVERLAIN BY 8 OZ/SY GEOTEXTILE PRIOR TO PLACEMENT OF GABIONS.
3. CHUTE DETAILS ARE SHOWN WITH 13 FEET OF BOTTOM WIDTH.
4. EROSION LAYER WILL BE CAPABLE OF SUSTAINING VEGETATIVE GROWTH.
5. THE EDGES OF THE INSTALLED GABIONS TIE EITHER TO THE TOP OF THE EROSION LAYER. (I.E., AT UPSTREAM END OF DRAINAGE LETDOWN) OR TO SOIL BERMS THAT ESTABLISH THE TOP OF THE DRAINAGE LETDOWN SIDE SLOPES.
6. THE SIDE SLOPES OF THE LANDFILL VARY FROM 20% TO 25% AS SHOWN ON FIGURE IIIH.2. SWALE CALCULATIONS ARE INCLUDED IN APPENDIX IIIH–D. (1)

FOR PERMITTING PURPOSES ONLY

CP&Y, INC.
TEXAS REGISTERED ENGINEERING FIRM F-1741

CITY OF Del Rio TEXAS

STATE OF TEXAS
TEMOBISTA METAFERIA
123183
LICENSED
PROFESSIONAL ENGINEER
06/22/2022

NO.	REVISION	BY	DATE
1.	7TH NOD	TM	06/2022

VERIFY SCALE 0 1"
BAR IS ONE INCH ON ORIGINAL DRAWING. IF NOT ONE INCH ON THIS SHEET, ADJUST SCALE

CITY OF DEL RIO
VAL VERDE COUNTY, TEXAS
MUNICIPAL SOLID WASTE LANDFILL NO. 207B
MAJOR PERMIT AMENDMENT
DRAINAGE DETAILS I

Date: OCTOBER 2020
Designed: T. METAFERIA
Drawn: J. TORRES
Reviewed: B. HINDMAN
CP&Y Proj. No. DELR1900546

FIGURE
IIIH.3

REFERENCES: DELR1900546 Border Base Permit.dwg DELR1900546_Std ENVIRO SEALS.dwg DELR1900546_CIVIL_DETAILS.dwg _Std ENVIRO SEALS
Jun 22, 2022 – 9:57am C:\pwworking\cpy\pw_cpy\tmetaferia\d0804194\DELR1900546 Figure IIIH.3.dwg LAYOUT: Layout1 USER:

CROSS SECTION E

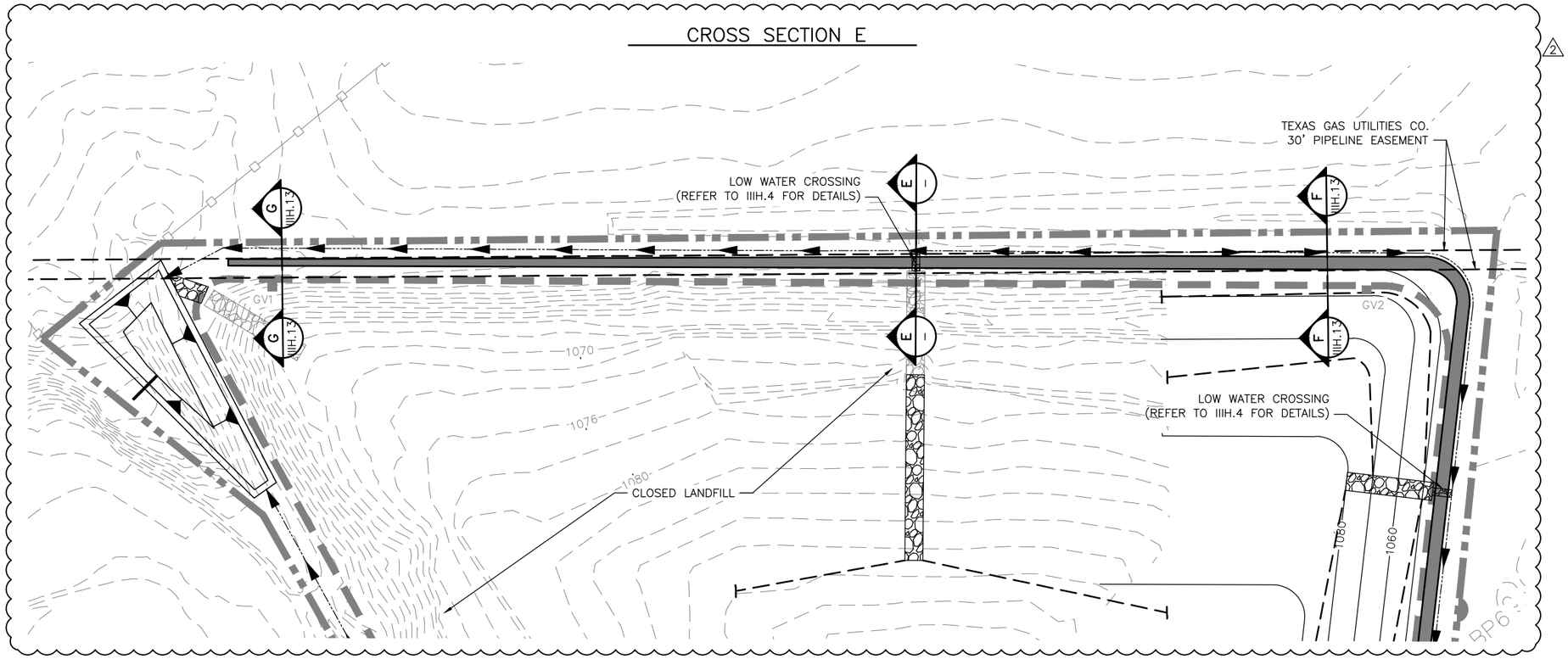

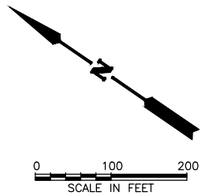

LEGEND

- PERMIT BOUNDARY
- LIMIT OF WASTE
- 1084 EXISTING CONTOURS
- SWALES
- PERIMETER CHANNEL
- CHUTES
- EXISTING CHUTE
- PROPOSED ACCESS ROAD

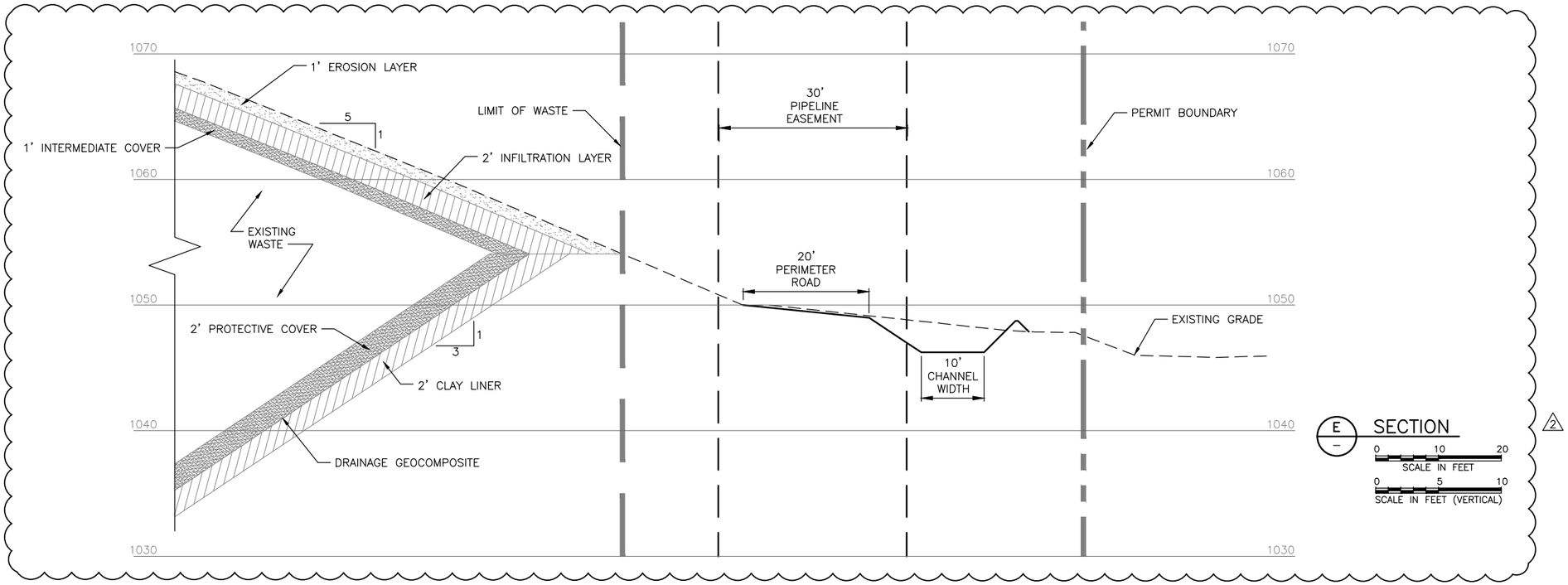

FOR PERMITTING PURPOSES ONLY

CP&Y, INC.
TEXAS ENGINEERING FIRM F-1741

CITY OF Del Rio TEXAS

Timothy Metaferia 06/22/2022

STATE OF TEXAS
TIMOTHY METAFERIA
123183
LICENSED
PROFESSIONAL ENGINEER

NO.	REVISION	BY	DATE
2.	7TH NOD	TM	06/2022
1.	NEW DRAWING	TM	03/2022

VERIFY SCALE 0 1" BAR IS ONE INCH ON ORIGINAL DRAWING. IF NOT ONE INCH ON THIS SHEET, ADJUST SCALE

CITY OF DEL RIO
VAL VERDE COUNTY, TEXAS
MUNICIPAL SOLID WASTE LANDFILL NO. 207B
MAJOR PERMIT AMENDMENT

CROSS SECTION E

Date: MARCH 2022
Designed: T. METAFERIA
Drawn: T. METAFERIA
Reviewed: B. HINDMAN
CP&Y Proj. No. DELR1900546

FIGURE

IIIH.12

REFERENCES: DELR1900546 Border Base Permit.dwg DELR1900546_Std ENVIRO SEALS.dwg DELR1900546_ECBASE.dwg DELR1900546_ECBASE_LF AREA COMPOSITE.dwg DELR1900546_PCBASE.dwg _Std ENVIRO SEALS
Jun 22, 2022 – 1:40pm C:\pwworking\cpy\pw_cpy\tmetaferia\d0804194\DELR1900546 Figure IIIH.12.dwg LAYOUT: Layout1 USER:

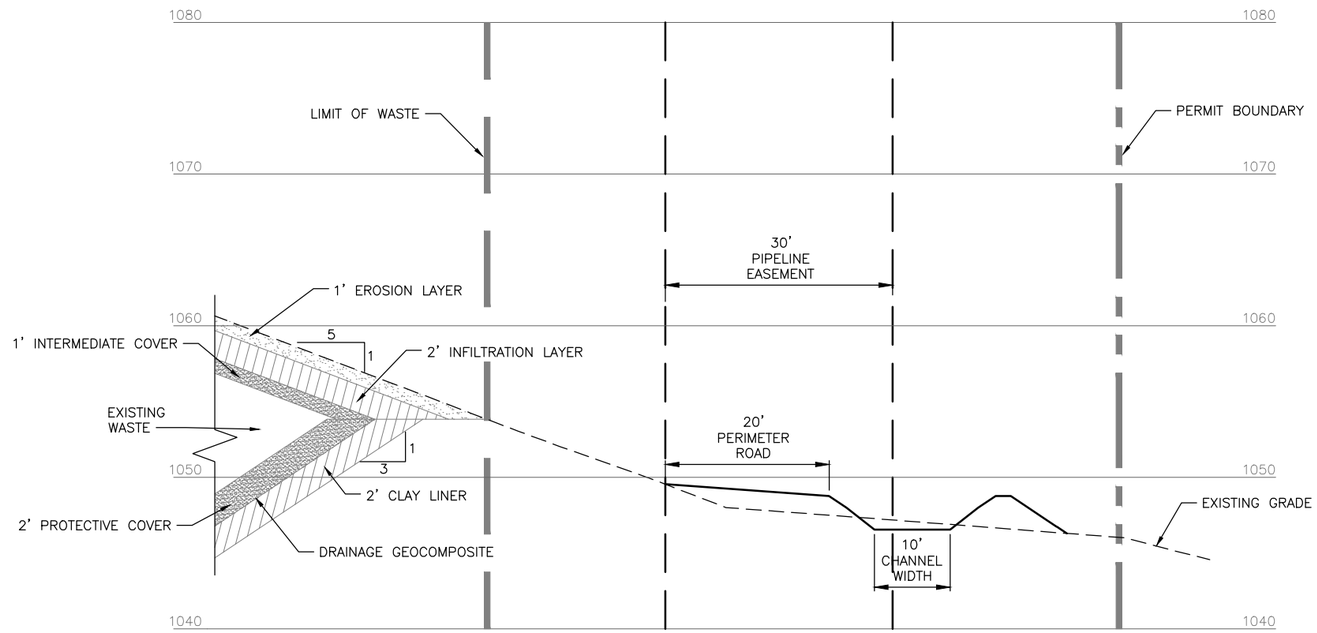

F
IIH-12
SECTION

0 10 20
SCALE IN FEET

0 5 10
SCALE IN FEET (VERTICAL)

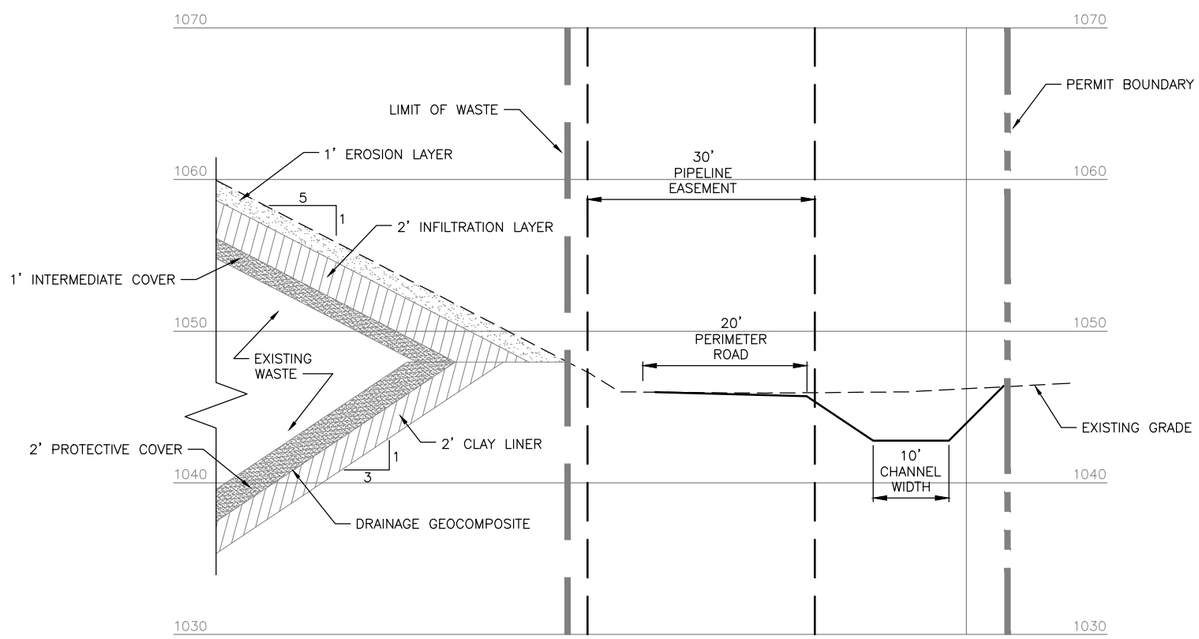

G
IIH-12
SECTION

0 10 20
SCALE IN FEET

0 5 10
SCALE IN FEET (VERTICAL)

FOR PERMITTING PURPOSES ONLY

CP&Y, INC.
TBPE REGISTERED ENGINEERING FIRM F-1741

CITY OF Del Rio TEXAS

Smoketite 06/22/2022

STATE OF TEXAS
TEMOBISTA METAFERIA
123183
LICENSED
PROFESSIONAL ENGINEER

NO.	REVISION	BY	DATE
1.	NEW DRAWING	TM	06/2022

VERIFY SCALE BAR IS ONE INCH ON ORIGINAL DRAWING. IF NOT ONE INCH ON THIS SHEET, ADJUST SCALE
0 1"

CITY OF DEL RIO
VAL VERDE COUNTY, TEXAS
MUNICIPAL SOLID WASTE LANDFILL NO. 207B
MAJOR PERMIT AMENDMENT

CROSS SECTION F AND G

Date: JUNE 2022
Designed: T. METAFERIA
Drawn: T. METAFERIA
Reviewed: B. HINDMAN
CP&Y Proj. No. DELR1900546

FIGURE
1
IIIH.13

REFERENCES: DELR1900546 Border Base Permit.dwg DELR1900546_Std ENVIRO SEALS.dwg DELR1900546_ECBASE.dwg DELR1900546_ECBASE_LF AREA COMPOSITE.dwg DELR1900546 _Std ENVIRO SEALS
Jun 22, 2022 – 1:45pm C:\pwworking\cpy\cpy_cpy\tmetaferia\d0804194\DELR1900546 Figure IIIH.13.dwg LAYOUT: Layout1 USER:

APPENDIX IIIH-C
CHANNEL, CONTAINMENT AND DIVERSION BERM DESIGN

06/22/2022

Client: City of Del Rio
Project: Major Permit Amendment
Description: Perimeter Channel Design

Date: 3/16/2022
Job No: DELR1900546
By: T. Metaferia
Checked By: B. Hindman

Purpose - To design perimeter channels to contain stormwater runoff from the 25-year frequency storm events.

Perimeter channels have been designed to contain stormwater runoff from the 25-year frequency storm events.

Channel	Station		Flow Rate (cfs)	Bottom Slope %	Bottom Width (ft)	Side Slope (ft/ft) Right	Left	Normal Depth (ft)	Flow Vel. (fps)	Fronde No.	Vel. Head (ft)	Specific Energy (ft)	Flow Area (sq.ft.)	Top width of Flow (ft)
	0+00.00	2+27.07	206.6	0.25%	10	3	3	2.90	3.28	0.48	0.23	3.12	54.15	27.38
CH1	2+27.07	16+48.45	82.2	0.25%	10	3	3	1.81	2.95	0.45	0.14	1.94	27.86	20.84
	0+00.00	7+67.69	323.4	~~0.72%~~ 0.65%	10	2	2	~~2.99~~ 3.36	~~6.77~~ 5.76	~~0.81~~ 0.66	~~0.71~~ 0.52	~~3.70~~ 3.87	~~47.77~~ 56.16	~~21.96~~ 23.44
	7+67.69	8+72.43	323.4	1.50%	10	2	2	2.46	8.81	1.14	1.20	3.37	36.73	19.84
CH2	8+72.43	9+35.38	323.4	1.30%	10	2	2	2.56	8.37	1.07	1.09	3.65	38.66	20.23
	9+35.38	11+53.65	323.4	0.85%	10	2	2	2.86	7.19	0.87	0.80	3.66	45.01	21.45
	11+53.65	24.+63.99	87.8	~~0.42%~~ 0.46%	10	2	2	~~1.71~~ 1.67	~~3.82~~ 3.95	~~0.58~~ 0.60	~~0.23~~ 0.24	~~1.93~~ 1.91	~~22.88~~ 22.24	~~16.82~~ 16.67
CH3	0+00.00	10+66.16	70.3	0.43%	10	3	3	1.44	3.41	0.57	0.18	1.62	20.59	18.63
CH4	0+00.00	15+71.63	99.4	0.35%	10	3	2	1.87	3.61	0.53	0.20	2.08	27.52	19.37
CH5	0+00.00	6+64.79	84.0	0.50%	6	3	3	1.84	3.96	0.63	0.24	2.08	21.21	17.05
CH6	0+00.00	9+52.13	67.0	0.50%	3	3	3	1.97	3.81	0.62	0.23	2.20	17.57	14.83
CH7	0+00.00	3+27.78	12.8	1.00%	0	3	3	1.14	3.29	0.77	0.17	1.31	3.89	6.84

Note:
1. Calculations were performed using Bentley FlowMaster.
2. n = 0.03 (Manning Coefficient) is used for the calculations.

Channel Erosion Control Design:

Channel erosion controls have been designed for flow velocities resulted from the 25-year frequency flow rates. As shown on above velocities in the perimeter channels range from 2.53 ft/s to 8.81 ft/s. All

The following was used to select the type of channel lining material.

- Vegetation - used in all areas where velocities are less than 5 ft/s for channels.
- Turf reinforcement matting - used in channels for velocities between 5 ft/s and 13 ft/s.

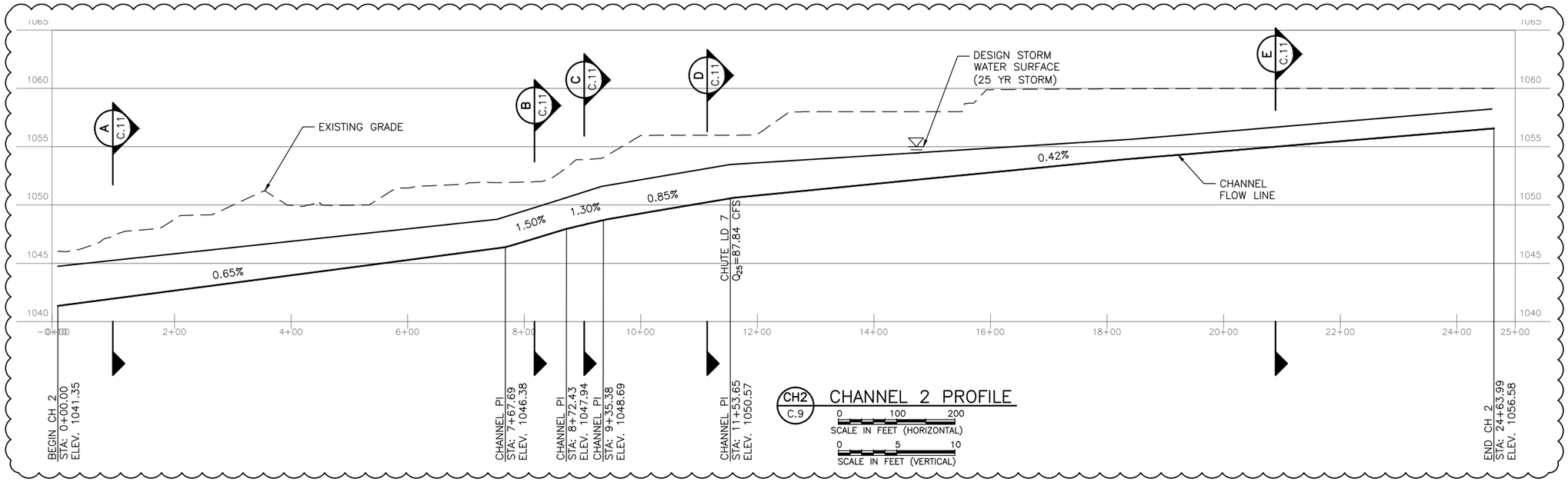

CH2 C.9 CHANNEL 2 PROFILE

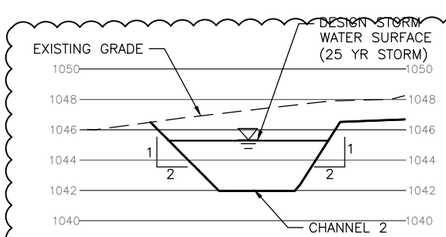

A C.11 SECTION

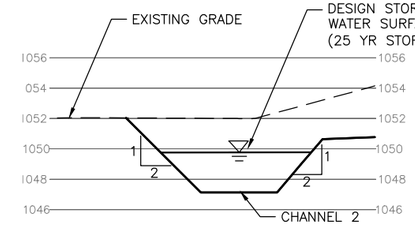

B C.11 SECTION

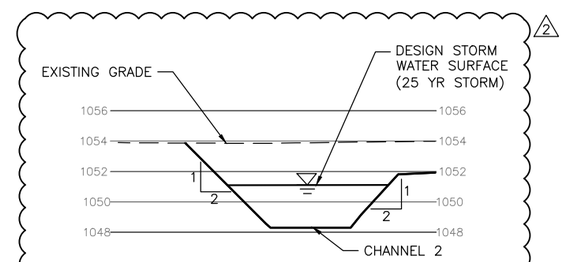

C C.11 SECTION

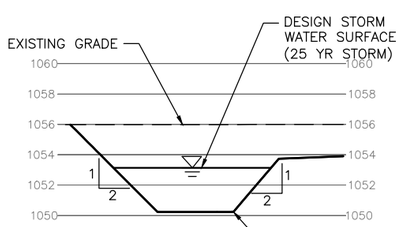

D C.11 SECTION

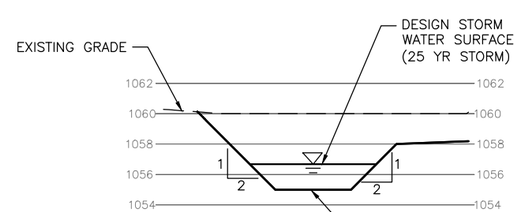

E C.11 SECTION

Channel	Station	Bottom Width (ft)	Flow Rate (cfs)	Bottom Slope %	Flow Vel. (fps)	Normal Depth (ft)
0+00.00	7+67.69	10	323.4	0.65%	5.76	3.36
7+67.69	8+72.43	10	323.4	1.50%	8.81	2.46
8+72.43	9+35.38	10	323.4	1.30%	8.37	2.56
9+35.38	11+53.65	10	323.4	0.85%	7.19	2.86
11+53.65	24.+63.99	10	87.8	0.46%	3.95	1.67

THE FOLLOWING WAS USED TO SELECT THE TYPE OF CHANNEL LINING MATERIAL
- VEGETATION WILL BE USED IN ALL AREAS WHERE VELOCITIES ARE LESS THAN 5 FT/S.
- TURF REINFORCEMENT MATTING WILL BE USED IN CHANNEL SECTIONS THAT HAVE VELOCITIES BETWEEN 5 FT/S AND 13 FT/S.

FOR PERMITTING PURPOSES ONLY

CP&Y, INC.
TEXAS BOARD OF ENGINEERING FIRM F-1741

CITY OF Del Rio TEXAS

06/22/2022
STATE OF TEXAS TEMOBISTA METAFERIA 123183 LICENSED PROFESSIONAL ENGINEER

NO.	REVISION	BY	DATE
2.	7TH NOD	TM	06/2022
1.	6TH NOD	TM	05/2022

VERIFY SCALE BAR IS ONE INCH ON ORIGINAL DRAWING. IF NOT ONE INCH ON THIS SHEET, ADJUST SCALE

CITY OF DEL RIO
VAL VERDE COUNTY, TEXAS
MUNICIPAL SOLID WASTE LANDFILL NO. 207B
MAJOR PERMIT AMENDMENT

CHANNEL 2 PROFILE AND CROSS SECTIONS

Date: MAY 2022
Designed: T. METAFERIA
Drawn: T. METAFERIA
Reviewed: B. HINDMAN
CP&Y Proj. No. DELR1900546

FIGURE
IIIH–C.11

REFERENCES: DELR1900546_PCBASE.dwg DELR1900546 Border Base Permit.dwg DELR1900546_Std ENVIRO SEALS.dwg _Std ENVIRO SEALS.dwg DELR1900546_Channel
Jun 22, 2022 – 2:34pm C:\pwworking\cpy\pw_cpy\tmetaferia\d0804194\DELR1900546 Figure IIIH–C–11.dwg LAYOUT: Layout1 USER:

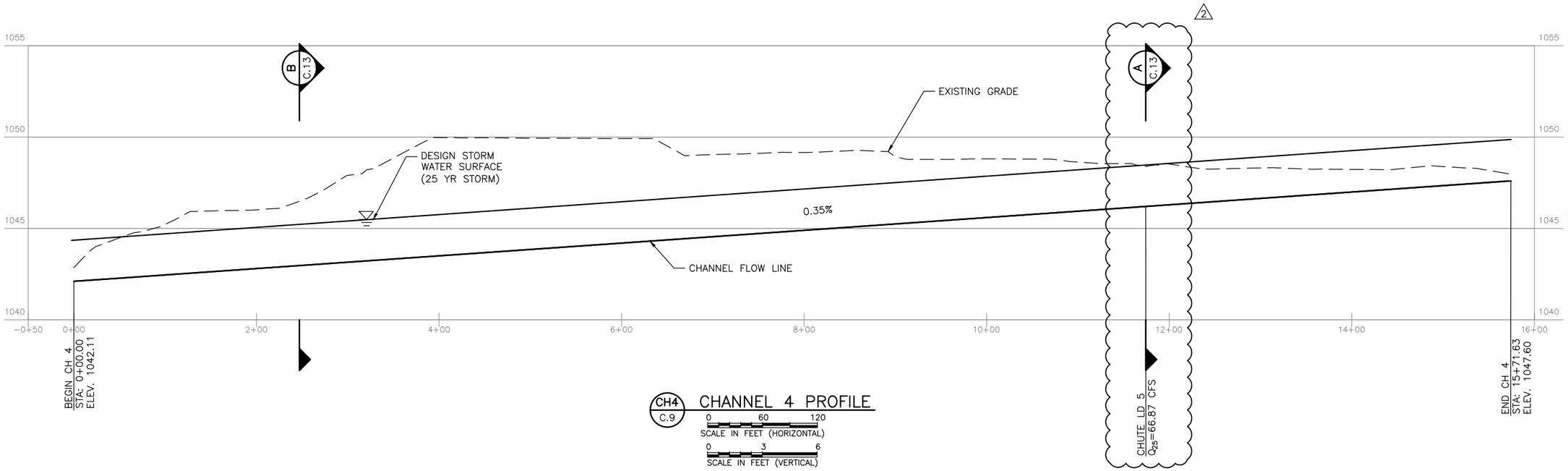

CH4 C.9 CHANNEL 4 PROFILE

0 60 120
SCALE IN FEET (HORIZONTAL)

0 3 6
SCALE IN FEET (VERTICAL)

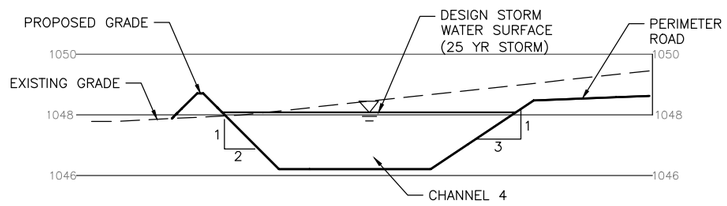

A C.13 SECTION

0 5 10
SCALE IN FEET (HORIZONTAL)

0 2.5 5
SCALE IN FEET (VERTICAL)

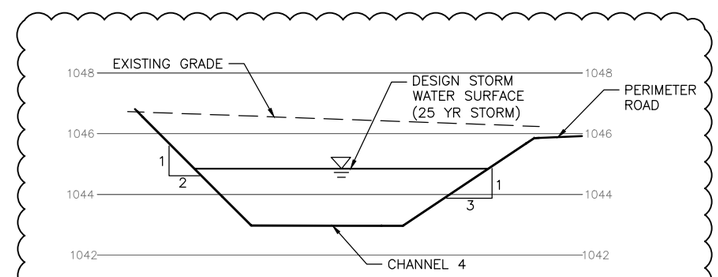

B C.13 SECTION

0 5 10
SCALE IN FEET (HORIZONTAL)

0 2.5 5
SCALE IN FEET (VERTICAL)

Channel	Station	Bottom Width (ft)	Flow Rate (cfs)	Bottom Slope %	Flow Vel. (fps)	Normal Depth (ft)
0+00.00	15+71.63	10	99.4	0.35%	3.61	1.87

THE FOLLOWING WAS USED TO SELECT THE TYPE OF CHANNEL LINING MATERIAL
- VEGETATION WILL BE USED IN ALL AREAS WHERE VELOCITIES ARE LESS THAN 5 FT/S.
- TURF REINFORCEMENT MATTING WILL BE USED IN CHANNEL SECTIONS THAT HAVE VELOCITIES BETWEEN 5 FT/S AND 13 FT/S.

FOR PERMITTING PURPOSES ONLY

CP&Y, INC.
TEXAS REGISTERED ENGINEERING FIRM F-1741

CITY OF Del Rio TEXAS

06/22/2022

STATE OF TEXAS
TEMOBISTA METAFERIA
123183
LICENSED
PROFESSIONAL ENGINEER

NO.	REVISION	BY	DATE
2.	7TH NOD	TM	06/2022
1.	6TH NOD	TM	05/2022

VERIFY SCALE 0 1"
BAR IS ONE INCH ON ORIGINAL DRAWING. IF NOT ONE INCH ON THIS SHEET, ADJUST SCALE

CITY OF DEL RIO
VAL VERDE COUNTY, TEXAS
MUNICIPAL SOLID WASTE LANDFILL NO. 207B
MAJOR PERMIT AMENDMENT

CHANNEL 4 PROFILE AND CROSS SECTIONS

Date: MAY 2022
Designed: T. METAFERIA
Drawn: T. METAFERIA
Reviewed: B. HINDMAN
CP&Y Proj. No. DELR1900546

FIGURE
IIIH–C.13

REFERENCES: DELR1900546_PCBASE.dwg DELR1900546 Border Base Permit.dwg DELR1900546_Std ENVIRO SEALS.dwg DELR1900546_Std ENVIRO SEALS.dwg DELR1900546_Std ENVIRO SEALS.dwg DELR1900546_Channel
Jun 22, 2022 – 1:29pm C:\pwworking\cpy\pw_cpy\tmetaferia\d0804194\DELR1900546 Figure IIIH-C-13.dwg LAYOUT: Layout1 USER:

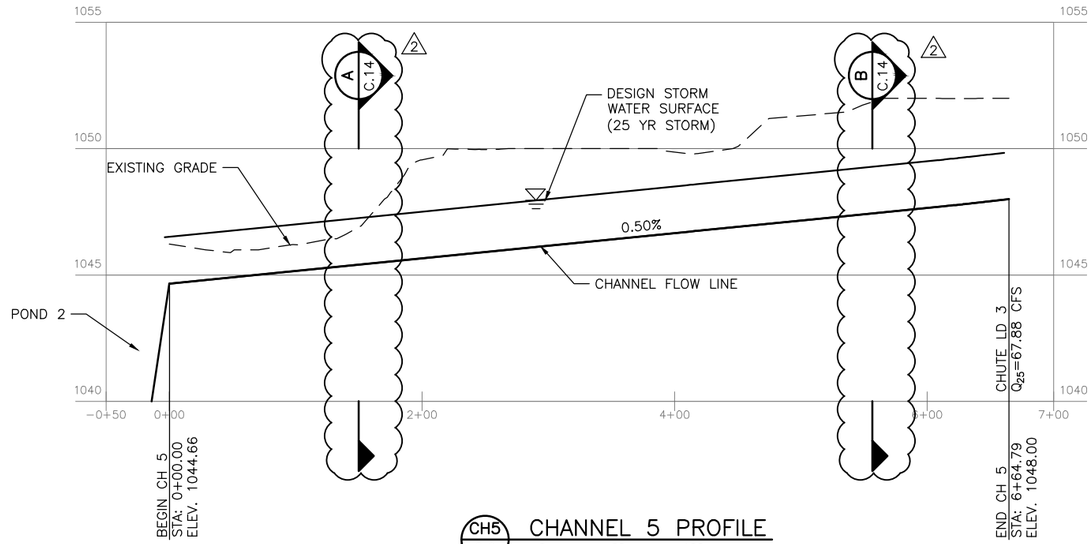

CH5 C.9 CHANNEL 5 PROFILE

0 60 120
SCALE IN FEET (HORIZONTAL)
0 3 6
SCALE IN FEET (VERTICAL)

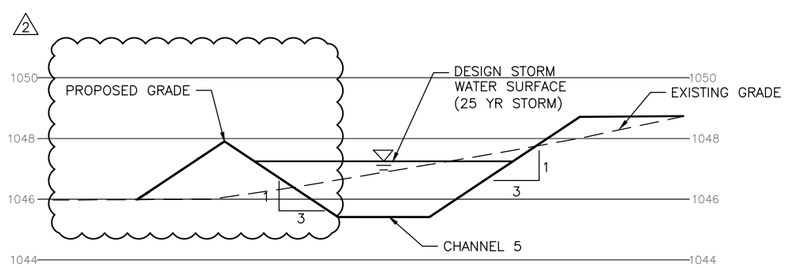

A C.14 SECTION

0 5 10
SCALE IN FEET (HORIZONTAL)
0 2.5 5
SCALE IN FEET (VERTICAL)

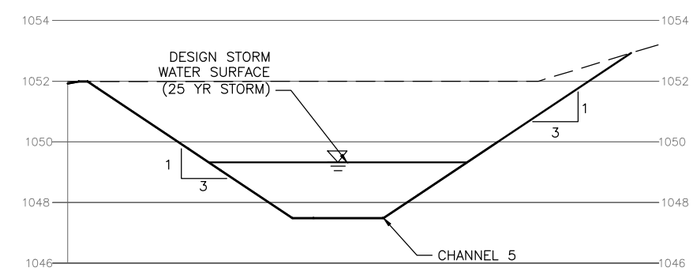

B C.14 SECTION

0 5 10
SCALE IN FEET (HORIZONTAL)
0 2.5 5
SCALE IN FEET (VERTICAL)

Channel Station		Bottom	Peak Flow	Slope	Velocity	Flow Depth
From	To	Width (ft)	(cfs)	(%)	(ft/s)	(ft)
0+00.00	6+64.79	6	84	0.5	3.96	1.84

THE FOLLOWING WAS USED TO SELECT THE TYPE OF CHANNEL LINING MATERIAL
- VEGETATION WILL BE USED IN ALL AREAS WHERE VELOCITIES ARE LESS THAN 5 FT/S.
- TURF REINFORCEMENT MATTING WILL BE USED IN CHANNEL SECTIONS THAT HAVE VELOCITIES BETWEEN 5 FT/S AND 13 FT/S.

FOR PERMITTING PURPOSES ONLY

CP&Y, INC.
TBPE REGISTERED ENGINEERING FIRM F-1741

CITY OF Del Rio TEXAS

STATE OF TEXAS
TEMOBISTA METAFERIA
123183
LICENSED PROFESSIONAL ENGINEER
06/22/2022

NO.	REVISION	BY	DATE
2.	7TH NOD	TM	06/2022
1.	6TH NOD	TM	05/2022

VERIFY SCALE 0 1"
BAR IS ONE INCH ON ORIGINAL DRAWING. IF NOT ONE INCH ON THIS SHEET, ADJUST SCALE

CITY OF DEL RIO
VAL VERDE COUNTY, TEXAS
MUNICIPAL SOLID WASTE LANDFILL NO. 207B
MAJOR PERMIT AMENDMENT

CHANNEL 5 PROFILE AND CROSS SECTIONS

Date: MAY 2022
Designed: T. METAFERIA
Drawn: T. METAFERIA
Reviewed: B. HINDMAN
CP&Y Proj. No. DELR1900546

FIGURE
IIIH–C.14

REFERENCES: DELR1900546_PCBASE.dwg DELR1900546 Border Base Permit.dwg DELR1900546_Std ENVIRO SEALS.dwg _Std ENVIRO SEALS.dwg DELR1900546_Channel
Jun 22, 2022 – 3:56pm C:\pwworking\cpy\pw_cpy\tmetaferia\d0804194\DELR1900546 Figure IIIH–C–14.dwg LAYOUT: Layout1 USER:

APPENDIX IIIH-D
FINAL COVER EROSION CONTROL STRUCTURE DESIGN

Figures IIIH-D-1 and IIIH-D-11

TABLE OF CONTENTS

1 DRAINAGE SWALE DESIGN

Typical Swale Design Summary:

- Typical swale drainage areas analyzed are shown on sheet IIIH-D-2.
- Hydraulic calculations are summarized on page IIIH-D-4.
- Maximum normal depth is 1.43 feet (Drainage Area SW3).
- Maximum flow velocity is 2.70 fps (Drainage Area SW3).
- Vegetation will be established on the swales to protect against erosion.

Typical swale drainage areas were selected such that all slope conditions (5% and 25%) are included in this analysis. The swales analyzed on sheet IIIH-D-2 were selected to include the swales that have the largest drainage area on the top slope (SW1) and side slope (SW3). All swales will be constructed to be a minimum of 2 feet tall as shown in Detail D on Figure IIIH.3. As mentioned above the maximum normal depth is 1.43 feet therefore the 2 feet swale will be adequate for all the swale drainage areas. ~~Additionally, swales with large individual drainage areas and short and long swale lengths are included in this analysis.~~

CITY OF DEL RIO LANDFILL

VAL VERDE COUNTY, TEXAS
TCEQ PERMIT NO. MSW-207B

MAJOR PERMIT AMENDMENT APPLICATION
PART III — SITE DEVELOPMENT PLAN

APPENDIX IIIK
WASTE CONTAINMENT POINT OF COMPLIANCE

Prepared for

City of Del Rio

October 2020
Revision 1 May 2021
Revision 2 October 2021
Revision 3 January 2022
Revision 4 March 2022
Revision 5 May 2022
Revision 6 June 2022

Prepared by
CP&Y Inc
TPBE Registration No. F-1741
1820 Regal Row, Suite 200
Dallas, TX 75235
214-638-0500

This document is intended for permitting purposes only.

TABLE OF CONTENTS

TABLES

FIGURES

APPENDIX

Table 6-2 – Chemical Specific Data

Variable Name	Unit	Value	Comments
Solid phase decay coefficient	1/yr	0	Not used
Dissolved phase decay coefficient	1/yr	0	Not used
Chemical decay coefficient	1/yr	0	Not used
Acid catalyst hydrolysis constant	l/m-yr	0	Not used
Neutral hydrolysis rate constant	1/yr	0	Not used
Base catalyst hydrolysis constant	l/m-yr	0	Not used
Reference temperature	C	25	Not used
Normalized distribution coefficient	ml/g	0	Simulation is steady state, with no chemical decay
Distribution coefficient	ml/g		Derived by MULTIMED.
Biodegradation coefficient	1/yr	0	Biodegradation not allowed by TCEQ

Site specific data was used to determine the source specific variables in the model. Tabel 6-3 lists the source specific data used for the base model. The infiltration rate is the net amount of leachate that percolates into the aquifer system from the landfill.

As noted in Section 6.1, the HELP model was used to estimate the infiltration rate of the Del Rio Landfill. The HELP models for the infiltration rate are included in Appendix IIIK-A. The recharge rate is the net amount of water that percolates directly into the aquifer system outside of the land disposal facility. The recharge is assumed to have no contamination and hence dilutes the groundwater contaminate plume. The HELP model was also used to calculate the rainfall recharge rate for the Del Rio Clay. The HELP output is included in Appendix IIIK-B.

The limits of waste, which is approximately 79 acres, was used to set the area of disposal unit in the module. Since the area of the disposal unit was identified, the length and width of the scale of the facility were derived by MULTIMED. The initial concentration at landfill was set to one as is typical when calculating the DAF.

Table 6-3 – Source Specific Data

Variable Name	Unit	Value	Comments
Infiltration rate	m/yr	1.76 X 10^{-4}	Derived from HELP (Appendix IIIK-A)
Area of disposal unit	m^2	320,000~~19,781~~	Limits of waste area
Spread of contaminant source	m	-	Derived by MULTIMED.
Recharge rate	m/yr	0.0282	Derived from HELP (Appendix IIIN-B)
Initial concentration at landfill	mg/l	1.0	Set at 1.0 to find DAF
Length scale of facility	m	-	Derived by MULTIMED.
Width scale of facility	m	-	Derived by MULTIMED.

The last module of inputs for the MULTIMED model is the aquifer specific parameters. The aquifer porosity, bulk density, and hydraulic conductivity are all obtained from Appendix E of the July 1994 TETCO Geotechnical Report. The particle diameter was obtained using Table 6-10 of the Manual for the Multimedia Exposure Assessment Model. Although the particle diameter is specified in the model it is not used for calculation since the aquifer porosity has been specified. The well distance is set to 100 feet at the POC. The other values in this module were derived by MULTIMED as shown in Table 6-4.

Table 6-4 – Aquifer Specific Data

Variable Name	Unit	Value	Comments
Particle diameter	cm	0.025	Obtained from Table 6-10 of the Manual for the Multimedia Exposure Assessment Model.
Aquifer porosity	unitless	0.10	Obtained from the TETCO Geotechnical Report
Bulk density	g/cc	2.40	Obtained from the TETCO Geotechnical Report
Aquifer thickness	m	91.4	Thickness of the Salmon Peak. Obtained from the TETCO Geotechnical Report. See Figure 3-1 in this appendix.
Mixing zone depth	m		Derived by MULTIMED.
Hydraulic conductivity	m/yr	100	Obtained from the TETCO Geotechnical Report (50 to 500 m/yr)
Hydraulic gradient	unitless	0.011	Section 4.1 of Appendix IIIN.
Groundwater seepage velocity	m/yr		Derived by MULTIMED.
Retardation coefficient	unitless	-	Derived by MULTIMED.
Longitudinal dispersity	m	-	Derived by MULTIMED.
Transversal dispersity	m	-	Derived by MULTIMED.
Vertical dispersity	m	-	Derived by MULTIMED.
Organic carbon content	%	0.003	Conservative assumption.
Receptor well distance	m	30	POC as shown in Figure 7.1

6.2.2 Sensitivity Analysis

The conservative base model, described in Section 6.2.1, was altered to test the sensitivity to the following parameters:

- Aquifer hydraulic conductivity (Aquifer Module)
- Aquifer thickness (Aquifer Module)
- Aquifer porosity (Aquifer Module)
- Hydraulic gradient (Aquifer Module)
- Receptor well distance/distance to POC (Aquifer Module)
- Infiltration rate (Source Module)
- Recharge rate (Source Module)

The base model calculated DAF is 290~~420~~. Table 6-5 shows the input parameters that were altered to test the model sensitivity. Two values were selected for each parameter shown in Table 6-5 to test the sensitivity of the model. One value being higher and one being lower than the number being used in the base model.

Table 6- 5– Sensitivity of Parameters to DAF

Variable Name	Sensitivity Values	DAF*
Aquifer hydraulic conductivity	50 m/yr	147~~211~~
	150 m/yr	434~~628~~
Aquifer thickness	50 m	243~~351~~
	125 m	289~~419~~
Aquifer porosity	0.05~~106~~	290~~420~~
	0.506	290~~420~~
Hydraulic gradient	0.024 ft/ft	630~~670~~
	0.006 ft/ft	160~~170~~
Receptor well distance	24.4 m	290~~419~~
	36.6 m	291~~421~~
Infiltration rate	2.5×10^{-4} m/yr	198~~269~~
	7.0×10^{-5} m/yr	705~~959~~
Recharge rate	0.01820 m/yr	290~~419~~
	0.0382 m/yr	291~~421~~

*The base model DAF is 290~~420~~.

The base model was varied 15 times to evaluate the sensitivity to various model parameters shown in Table 6-5. Aquifer hydraulic conductivity, hydraulic gradient, and infiltration rate were the three parameters that impacted the DAF calculations the most. The hydraulic conductivity was varied by a magnitude of 50 meters to test the sensitivity of the model. The increase in hydraulic conductivity leads to a high DAF since most of dilution occurs beneath the landfill and the high hydraulic conductivity leads to higher Darcy flux. The change in the hydraulic gradient input also considerably varied the DAF calculations. The low hydraulic gradient means low water flow resulting in a low DAF. A fast-moving water flow (high hydraulic gradient) results in a high DAF, because the dilution beneath the landfill increases faster than dilution in the aquifer. The last parameter that impacted the DAF was the infiltration rate. As the infiltration rate increases the DAF decreased due to the increased amount of contaminates in the water. The aquifer thickness, aquifer porosity, receptor well distance, and recharge rate did not significantly impact the DAF. The output files for the MULTIMED runs are included in Appendix IIIK-C.

7 MODEL INPUT PARAMETERS

Appendices IIIK-A through IIIK-C present detailed information about the HELP and MULTIMED models and liner leakage calculations. Conservative assumptions were made in determining the recharge rate, percolation rate, and the dilution attenuation factor (DAF). The results of the leachate generation model utilizing the HELP Model are included in Appendix IIIK-A. The HELP model input parameters for determining the recharge rate through the Del Rio Clay and percolation is detailed in Appendix IIIK-B.

The MULTIMED model input parameters are detailed in Appendix IIIK-C. The POC for this demonstration is shown on Figure 7.1. The POC as defined by §330.3(108) is a vertical surface located no more than 500 feet from the hydraulically downgradient limit of the waste management unit boundary, extending down

8 RESULTS AND CONCLUSIONS

As shown in the HELP Model Summary Sheets included in Appendix IIIK-A (pages IIIK-A-4A and IIIK-A-4B) the approved alternative liner containment design has the highest leachate percolation compared to the overliner. The liner leakage rate estimated using the HELP model was used as an infiltration rate input in the MULTIMED model in conjunction with the recharge rate, calculated in Appendix IIIK-B, to evaluate the performance of the approved alternate liner system design by estimating constituent concentrations at the POC. The constituent concentrations at the base of the landfill liner and at the POC were used to calculate the DAF. The approved alternate liner must provide a DAF of 260 at the point of compliance.

The results of the alternate liner design base model demonstration are provided below:

- POC distance = 100 ft was used in the model as shown in Figure 7.1.
- Liner leakage rate from HELP model = 1.76 x 10^{-4} m/yr (this value was used as infiltration rate input into the MULTIMED models)
- DAF = 290420

Table 6-5 shows the all the MULTIMED simulations that were run for this project with the different parameters. As shown in the Table 6-5 the simulations all demonstrate compliance with the minimum dilution factor required for an alternative liner demonstration. The DAF values from the different simulations range from 1470 to 705959. It should also be noted that the leachate quality at Del Rio Landfill, as shown in Table 3-2, is at or lower than the MCL values set in 330.331(a)(1). The predicted concentrations of the selected leachate chemical constituents do not exceed maximum contaminant levels in the perched groundwater zone at the point of compliance for either the approved alternate liner or the pre-Subtitle D overliner areas.

APPENDIX IIIK-A

LEACHATE GENERATION MODEL

06/22/2022

LEACHATE GENERATION MODEL

HELP MODEL

The Hydrologic Evaluation of Landfill Performance (HELP) Model, Version 4.0 was used to estimate quantity of leachate that will be generated during the active life and post-closure period of the Del Rio Landfill. The HELP Model is a quasi-two-dimensional hydrologic model of water movement across, into, through, and out of the landfill. The model uses climate, soil, and landfill design data to perform a solution technique that accounts for the effects of surface storage, runoff, infiltration, percolation, soil moisture storage, evapotranspiration, and lateral drainage.

MODEL SETUP

The site was modeled as a 1-acre unit area for the following stages of landfill development in developed and undeveloped Subtitle D areas:

Table 1-1 – Landfill Conditions Modeled in HELP

Area	Interim Condition 23-Year Timeframe	Closed Condition 30-Year Timeframe
Subtitle D Area	50 feet of waste with intermediate cover	80 feet of waste with final cover
Pre-Subtitle D with Overliner Area	60 feet of waste with intermediate cover	60 feet of waste with final cover

The active stage was modeled for one year with intermediate or daily cover. The interim stages with intermediate cover were modeled for 23 years based on the approximate projected site life. The closed landfill condition was modeled for 30 years. The evaporative zone depth was selected to be 12 inches. The leaf area index was selected to be 2 for the interim cases and 4.5 for the closed case based on the selected ground area. The evaporative zone depth and leaf area index numbers were obtained from the Figures provided in Appendix F of EPA's Hydrologic Evaluation of landfill Performance: HELP 4.0 User Manual. The Soil Conservation Service (SCS) runoff curve numbers were calculated by HELP based on soil data and expected ground cover, surface slope, and slope length. The interim cases utilize the default curve number assigned by the HELP model which is 87.9 and corresponds to "fair" ground cover. The percent runoff area used varies between 80. This is representative of the intermediate cover, which will be 12 inches of compacted soil with 60 percent or more vegetation coverage as specified in Section 3 of Appendix IIIH-E (allows a soil loss up to 50 ton/acre-yr for intermediate cover which equates to 60 percent vegetation coverage). The final case models a curve number of 82 and percent runoff area of 100, which corresponds to "good" ground cover. This is representative of the final cover, which will have a minimum 90 percent vegetation coverage as specified in Section 2.2 of Appendix IIIE.

HELP Model Summary Sheet - Pre-Subtitle D Area

Client: City of Del Rio
Project: Major Permit Amendment
Description: HELP Model Summary Sheet

Date: 1/31/2022
Job No: DELR1900546
By: T. Metaferia
Checked By: B. Hindman

		INTERIM (60 FT WASTE)	FINAL (60 FT WASTE)
GENERAL INFORMATION	Case No.	1	2
	No. of Years	23	30
	SCS Runoff Curve No.	87.9	82
	Model Area (acre)	1	1
	Runof Area (%)	80	100
	Maximum Leaf Area Index	2	4.5
	Evaporative Zone Depth (inch)	~~12~~ 10	12
FINAL COVER	Thickness (in)		12
(TEXTURE = 10)	Porosity (vol/vol)		0.398
	Field Capacity (vol/vol)		0.244
	Wilting Point (vol/vol)		0.136
	Init. Moisture Content (vol/vol)		0.244
	Hyd. Conductivity (cm/s)		1.20E-04
DRAINAGE LAYER	Thickness (in)		18
(TEXTURE = 16)	Porosity (vol/vol)		0.427
	Field Capacity (vol/vol)		0.418
	Wilting Point (vol/vol)		0.367
	Init. Moisture Content (vol/vol)		0.427
	Hyd. Conductivity (cm/s)		1.00E-07
INTERMEDIATE COVER	Thickness (in)	12	12
(TEXTURE = 11)	Porosity (vol/vol)	0.464	0.464
	Field Capacity (vol/vol)	0.31	0.31
	Wilting Point (vol/vol)	0.187	0.187
	Init. Moisture Content (vol/vol)	0.31	0.31
	Hyd. Conductivity (cm/s)	6.40E-05	6.40E-05
WASTE	Thickness (in)	120	120
(TEXTURE =18)	Porosity (vol/vol)	0.671	0.671
	Field Capacity (vol/vol)	0.292	0.292
	Wilting Point (vol/vol)	0.077	0.077
	Init. Moisture Content (vol/vol)	0.272	0.272
	Hyd. Conductivity (cm/s)	1.00E-03	1.00E-03
PROTECTIVE COVER	Thickness (in)	24	24
(TEXTURE = 10)	Porosity (vol/vol)	0.398	0.398
	Field Capacity (vol/vol)	0.244	0.244
	Wilting Point (vol/vol)	0.136	0.136
	Init. Moisture Content (vol/vol)	0.244	0.244
	Hyd. Conductivity (cm/s)	~~1.20E-05~~ 1.20E-04	~~1.20E-05~~ 1.20E-04
LEACHATE COLLECTION LAYER	Thickness (in)	0.3	0.3
(TEXTURE = 44)	Porosity (vol/vol)	0.85	0.85
	Field Capacity (vol/vol)	0.01	0.01
	Wilting Point (vol/vol)	0.005	0.005
	Init. Moisture Content (vol/vol)	0.01	0.01
	Hyd. Conductivity (cm/s)	7.67	7.67
	Slope (%)	0.5	0.5
	Slope Length (ft)	500	500
FLEXIBLE MEMBRANE LINER	Thickness (in)	0.04	0.04
(TEXTURE = 35)	Hyd. Conductivity (cm/s)	4.00E-13	4.00E-13
	Pinhole Density (holes/acre)	1	1
	Install. Defects (holes/acre)	4	4
	Placement Quality	3	3
SUBGRADE SOIL LAYER	Thickness (in)	12	12
(TEXTURE = 11)	Porosity (vol/vol)	0.464	0.464
	Field Capacity (vol/vol)	0.31	0.31
	Wilting Point (vol/vol)	0.187	0.187
	Init. Moisture Content (vol/vol)	0.31	0.31
	Hyd. Conductivity (cm/s)	6.40E-05	6.40E-05
WASTE	Thickness (in)	600	600
(TEXTURE =18)	Porosity (vol/vol)	0.671	0.671
	Field Capacity (vol/vol)	0.292	0.292
	Wilting Point (vol/vol)	0.077	0.077
	Init. Moisture Content (vol/vol)	0.272	0.272
	Hyd. Conductivity (cm/s)	1.00E-03	1.00E-03
BARRIER SOIL LAYER	Thickness (in)	36	36
(TEXTURE = 29)	Porosity (vol/vol)	0.451	0.451
	Field Capacity (vol/vol)	0.419	0.419
	Wilting Point (vol/vol)	0.332	0.332
	Init. Moisture Content (vol/vol)	0.451	0.451
	Hyd. Conductivity (cm/s)	6.80E-07	6.80E-07
PRECIPITATION	Average Annual (in)	16.99	18.19
RUNOFF	Average Annual (in)	~~0.346~~ 0.374	~~0.178~~ 0.202
EVAPOTRANSPIRATION	Average Annual (in)	~~16.702~~ 16.131	~~17.297~~ 17.940
PRECOLATION	Average Annual (cf/yr)	0.000	0.000
THROUGH BOTTOM LINE	Average Annual (mm/yr)	0.000	0.000
HEAD OF LINER	Average Annual (in)	0.000	0.000
	Average Daily (in)	0.000	0.000

HELP Model Summary Sheet - Subtitle D

Client: City of Del Rio
Project: Major Permit Amendment
Description: HELP Model Summary Sheet

Date: 1/31/2022
Job No: DELR2000302
By: T. Metaferia
Checked By: B. Hindman

		INTERIM (50 FT WASTE)	CLOSED (80 FT WASTE)
GENERAL INFORMATION	Case No.	1	2
	No. of Years	23	30
	SCS Runoff Curve No.	87.9	82
	Model Area (acre)	1	1
	Runof Area (%)	80	100
	Maximum Leaf Area Index	2	4.5
	Evaporative Zone Depth (inch)	10	12
TOPSOIL LAYER	Thickness (in)		12
(TEXTURE = 10)	Porosity (vol/vol)		0.398
	Field Capacity (vol/vol)		0.244
	Wilting Point (vol/vol)		0.136
	Init. Moisture Content (vol/vol)		0.244
	Hyd. Conductivity (cm/s)		1.20E-04
INFILTRATION LAYER	Thickness (in)		18
(TEXTURE = 0)	Porosity (vol/vol)		0.427
	Field Capacity (vol/vol)		0.418
	Wilting Point (vol/vol)		0.367
	Init. Moisture Content (vol/vol)		0.427
	Hyd. Conductivity (cm/s)		1.00E-07
INTERMEDIATE COVER	Thickness (in)	12	12
(TEXTURE = 11)	Porosity (vol/vol)	0.464	0.464
	Field Capacity (vol/vol)	0.31	0.31
	Wilting Point (vol/vol)	0.187	0.187
	Init. Moisture Content (vol/vol)	0.31	0.31
	Hyd. Conductivity (cm/s)	6.40E-05	6.40E-05
WASTE TOP[1]	Thickness (in)	600	960
(TEXTURE = 0)	Porosity (vol/vol)	0.671	0.671
	Field Capacity (vol/vol)	0.292	0.292
	Wilting Point (vol/vol)	0.077	0.077
	Init. Moisture Content (vol/vol)	0.272	0.272
	Hyd. Conductivity (cm/s)	1.00E-03	1.00E-03
PROTECTIVE COVER	Thickness (in)	24	24
(TEXTURE = 10)	Porosity (vol/vol)	0.398	0.398
	Field Capacity (vol/vol)	0.244	0.244
	Wilting Point (vol/vol)	0.136	0.136
	Init. Moisture Content (vol/vol)	0.244	0.244
	Hyd. Conductivity (cm/s)	1.20E-04	1.20E+04
LEACHATE COLLECTION LAYER	Thickness (in)	~~0.25~~ 0.30	~~0.25~~ 0.30
(TEXTURE = 0)	Porosity (vol/vol)	0.85	0.85
	Field Capacity (vol/vol)	0.01	0.01
	Wilting Point (vol/vol)	0.005	0.005
	Init. Moisture Content (vol/vol)	0.01	0.01
	Hyd. Conductivity (cm/s)	2.05	2.05
	Slope (%)	2	2
	Slope Length (ft)	200	200
CLAY LINER	Thickness (in)	24	24
(TEXTURE = 0)	Porosity (vol/vol)	0.427	0.427
	Field Capacity (vol/vol)	0.418	0.418
	Wilting Point (vol/vol)	0.367	0.367
	Init. Moisture Content (vol/vol)	0.427	0.427
	Hyd. Conductivity (cm/s)	1.00E-07	1.00E-07
PRECIPITATION	Average Annual (in)	16.99	18.19
RUNOFF	Average Annual (in)	0.374	0.202
EVAPOTRANSPIRATION	Average Annual (in)	16.130	17.94
PRECOLATION	Average Annual (cf/yr)	~~24.0~~ 24.2	0.000
THROUGH BOTTOM LINE	Average Annual (mm/yr)	0.170	0.000
HEAD OF LINER	Average Annual (in)	0.000	0.000
	Peak Daily (in)	0.016	0.000

1. The field capacity and porosity values for the waste layer were obtained from: Zornberg, Jorge G. et. al, Retention of Free Liquids in Landfills Undergoing Vertical Expansion. Journal of Geotechincal and Geoenvironmental Engineering, July 1999, pp. 583-594.

APPENDIX IIIK-C

MULTIMED MODEL

06/22/2022

MULTIMED MODEL OUTPUT

CITY OF DEL RIO LANDFILL

VAL VERDE COUNTY, TEXAS
TCEQ PERMIT NO. MSW-207B

MAJOR PERMIT AMENDMENT APPLICATION
PART III — SITE DEVELOPMENT PLAN

APPENDIX IIIN
NO MIGRATION DEMONSTRATION

Prepared for

City of Del Rio

October 2021

Revision 1 January 2022
Revision 2 March 2022
Revisions 3 May 2022
Revision 4 June 2022

Prepared by

CP&Y Inc
TPBE Registration No. F-1741
1820 Regal Row, Suite 200
Dallas, TX 75235
214-638-0500

TABLE OF CONTENTS

TABLES

FIGURES

APPENDIX

Table 6-1 – Landfill Conditions Modeled in HELP

Area	Active Condition 1-Year Timeframe	Interim Condition 23-Year Timeframe	Closed Condition 30-Year Timeframe
Subtitle D Area	50 feet of waste with intermediate cover	50 feet of waste with intermediate cover	80 feet of waste with final cover
Pre-Subtitle D with Overliner	60 feet of waste with intermediate cover	60 feet of waste with intermediate cover	60 feet of waste with final cover

The active stage of the landfill was modeled for one year with intermediate or daily cover. A waste height of 50 feet is used for the active and interim conditions based on a bottom of waste grade elevation of 1021 ft-msl and an average top of waste grade elevation of 1070 ft-msl for the Subtitle-D area. A waste height of 60 feet was used for the pre-Subtitle-D area based on an assumed bottom of waste elevation at 1040 ft-msl and an average top of waste at 1100 ft-msl. The interim stages with intermediate cover were modeled for 23 years based on the projected site life. The site life calculations are included in Appendix IIIB. The closed landfill condition was modeled for 30 years based on TCEQ's post-closure period.

The evaporative zone depth was selected to be 10 inches for the active and interim cases and 12 inches for the closed case. The leaf area index was selected 2 for the interim cases and 4.5 for the closed case based on the selected ground area. The Soil Conservation Service (SCS) runoff curve numbers were calculated by HELP based on soil data and expected ground cover, surface slope, and slope length.. The interim cases utilize the default curve number assigned by the HELP model which is 87.9 and corresponds to "fair" ground cover. The percent runoff area used varies between 80. This is representative of the intermediate cover, which will be 12 inches of compacted soil with 60 percent or more vegetation coverage as specified in Section 3 of Appendix IIIH-E (allows a soil loss up to 50 ton/acre-yr for intermediate cover which equates to 60 percent vegetation coverage). The final case models a curve number of 82 and percent runoff area of 100, which corresponds to "good" ground cover. This is representative of the final cover, which will have a minimum 90 percent vegetation coverage as specified in Section 2.2 of Appendix IIIE.

6.1.2.1 MOISTURE CONTENT AND FIELD CAPACITY

The initial moisture content was set at field capacity for all profile layers except the compacted clay barrier layer and the waste layer. HELP automatically sets the initial moisture content for a compacted clay barrier layer at porosity that is fully saturated. Refer to Appendix IIIK-A for additional information.

6.1.2.2 CLIMATE DATA INPUT

Precipitation data was synthetically simulated based on HELP V4 model program simulation using the latitude and longitude for Del Rio, Texas. The average annual precipitation over the modeled 30-year period was 18.19 inches. Temperature and solar radiation data were also synthetically generated by the HELP model using program defaults for Del Rio, Texas.

6.1.2.3 LANDFILL PROFILE

The profile presented below includes a clay liner with a standard Subtitle D final cover system. For additional information on the Liner Quality Control Plan refer to Appendix IIID.

- **Liner System** – The Subtitle D clay liner designed for developed and undeveloped cells consists of a 24-inch-thick compacted clay liner with a hydraulic conductivity of $1x10^{-7}$ cm/s. Default soil characteristics from the HELP model were selected for the compacted clay liner.

The HELP model was also used to calculate the rainfall recharge rate for the Del Rio Clay. The HELP output is included in Appendix IIIN-B.

The limits of waste, which is approximately 79 acres, was used to set the area of disposal unit in the module. Since the area of the disposal unit was identified, the length and width of the scale of the facility were derived by MULTIMED. The duration of pulse was set to 10,000 years. The initial concentration at landfill was set to one as is typical when calculating the dilution-attenuation factor (DAF).

Table 6-3 – Source Specific Data

Variable Name	Unit	Value	Comments
Infiltration rate	m/yr	1.7~~6~~ X 10^{-4}	Derived from HELP (Appendix IIIK-A, page IIIK-A-4B)
Area of disposal unit	m^2	320,000~~319,781~~	Limits of waste area
Spread of contaminant source	m	-	Derived by MULTIMED.
Recharge rate	m/yr	0.0282	Derived from HELP (Appendix IIIN-B)
Initial concentration at landfill	mg/l	1.0	Set at 1.0 to find DAF
Duration of pulse	yr	10,000	Assumed
Length scale of facility	m	-	Derived by MULTIMED.
Width scale of facility	m	-	Derived by MULTIMED.

The two modules that MULTIMED uses to model the unsaturated zone are transport and flow modules. Input parameters for the unsaturated flow module are described below. The unsaturated zone is between the bottom of the landfill liner and the top of the Salmon Peak. Based on the bedrock contours on the top of the Edwards hydrologic unit shown on Figure 4.1, the Edwards (Salmon Peak) elevation contour (940 ft-msl) was selected to represent the uppermost aquifer underlying the landfill. For this demonstration, the uppermost aquifer is located 78 feet (in the vertical direction) from the bottom of liner elevation. The hydraulic conductivity for the Del Rio Clay used in the model is 2.0 X 10^{-7} cm/sec. This value is obtained from the November 1994 TETCO geotechnical evaluation report included in Appendix IIIJ-C, page IIIJ-C-91. The hydraulic conductivity was calculated based on the soil parameters for the top 60 feet of the Del Rio Clay. The Del Rio Clay below 60 feet is more compact and less permeable, as the materials are not weathered, contain little to no moisture, and any existing secondary structures would be tightly closed from overburden. Since the 78 feet of Del Rio Clay between the bottom of liner and the top of the Salmon Peak was modeled as one layer this hydraulic conductivity value is considered conservative. The unsaturated zone porosity requires the effective porosity, which is part of the total porosity which is effective at transmitting water. Unsaturated zone porosity is 0.02 for clay and is dimensionless. The residual water content is the amount of the total water content which can't be removed from the soil, even under large suction pressure because it adheres to the soil grains. This value was obtained using Table 6-4 of the Manual for the Multimedia Exposure Assessment Model for clay. The ALPHA van Genuchten and BETA Van Genuchten coefficients were also obtained using Tabel 6-5 of the Manual for the Multimedia Exposure Assessment Model for clays. The Van Genuchten coefficients are used to describe (1) the pressure head versus water saturation relationships and (2) the relationship between relative permeability and water saturation. Tabel 6-4 lists the parameters used for the unsaturated flow module.

Table 6-6 – Aquifer Specific Data

Variable Name	Unit	Value	Comments
Particle diameter	cm	0.025	Obtained from Table 6-10 of the Manual for the Multimedia Exposure Assessment Model.
Aquifer porosity	unitless	0.10	Obtained from the TETCO Geotechnical Report
Bulk density	g/cc	2.40	Obtained from the TETCO Geotechnical Report
Aquifer thickness	m	91.4	Thickness of the Salmon Peak. Obtained from the TETCO Geotechnical Report. See Figure 3-1 in this appendix.
Mixing zone depth	m		Derived by MULTIMED.
Hydraulic conductivity	m/yr	50	Obtained from the TETCO Geotechnical Report (50 to 500 m/yr)
Hydraulic gradient	unitless	0.011	Section 4.1 of this appendix.
Groundwater seepage velocity	m/yr		Derived by MULTIMED.
Retardation coefficient	unitless		Derived by MULTIMED.
Longitudinal dispersity	m		Derived by MULTIMED.
Transversal dispersity	m		Derived by MULTIMED.
Vertical dispersity	m		Derived by MULTIMED.
Organic carbon content	%	0.003	Conservative assumption.
Receptor well distance	m	1	Conservative assumption.

6.2.2 Sensitivity Analysis

According to the EPA's "Preparing No-Migration Demonstration for Municipal Solid Waste Disposal Facilities: Screening Tool" the five variables that significantly influence the time of travel of leachate from the landfill to the uppermost aquifer are (1) depth of groundwater, (2) permeability of the soil, (3) the precipitation rate, (4) the evapotranspiration potential, and (5) the net infiltration rate. When conducting the sensitivity analyses, the recharge rate and net infiltration rates were altered to account for the precipitation rate and evapotranspiration potential since the HELP model utilizes these parameters in the net infiltration and rechange rate calculations. In addition to parameters mentioned above, the parameters below were also altered to test the sensitivity to time of travel.

- Aquifer hydraulic conductivity (Aquifer Module)
- Aquifer thickness (Aquifer Module)
- Aquifer porosity (Aquifer Module)
- Hydraulic gradient (Aquifer Module)
- Saturated hydraulic conductivity (Unsaturated Flow Module)
- Unsaturated Zone porosity (Unsaturated Flow Module)

The base model calculated time of travel to be 6000 years. The output files for the MULTIMED runs are included in Appendix IIIN-A. Table 6-7 shows the input parameters that were used to test the model sensitivity to calculate the time of travel. Two values were selected for each parameter shown in Table 6-7 to test the sensitivity of the model. One value being higher and one being lower than the number being used in the base model. As shown in the table below, the four parameters impacting the time of travel are (1) the saturated hydraulic conductivity, (2) unsaturated zone porosity, (3) depth of the unsaturated zone, and (4) infiltration rate.

Table 6- 7– Sensitivity of Time of Travel to Input Parameters

Variable Name	Sensitivity Values	Time of Travel with Sensitivity Values (yrs)*
Aquifer hydraulic conductivity	25 m/yr	18~~9~~50
	75 m/yr	18~~9~~50
Aquifer thickness	45.7 m	18~~9~~50
	183~~2.8~~ m	18~~9~~50
Aquifer porosity	0.05~~106~~	18~~9~~50
	0.606	18~~9~~50
Hydraulic gradient	0.0015	18~~9~~50
	0.150	18~~9~~50
Saturated hydraulic conductivity	0.000072 cm/hr	16~~7~~50
	0.0072 cm/hr	21~~2~~00
Unsaturated zone porosity	0.0020	450~~0~~
	0.20	More than 10,000
Depth of the unsaturated zone	15 m	~~80~~750
	5 m	20~~5~~0
Infiltration rate	0.00007~~3~~ m/yr	4000
	0.00025~~13~~ m/yr	1200
Recharge rate	0.282 m/yr	18~~9~~50
	0.00282 m/yr	18~~9~~50

*The base model time of travel is 18~~9~~50 yrs.

As shown in Tabel 6-7, unsaturated zone porosity, infiltration rate and the depth of the unsaturated zone input parameters impact the time of travel. The unsaturated zone porosity input in MULTIMED is the effective porosity. The effective porosity is that part of the total porosity which is effective at transmitting water. A low unsaturated zone porosity results in a shorter time of travel. Infiltration rate is the second input that varies the time of travel. High infiltration rate increases the speed of contaminate entering the soil resulting in a low time of travel. A decrease in the infiltration rate will slow down the time of travel as shown in the table above. The change in the depth of unsaturated zone also varied the time of travel. Decreasing the depth of the unsaturated zone had the most impact on the time of travel. Using a depth of 5 meters for the unsaturated zone, which assumes that the Salmon Peak is 5 meters below the bottom of the liner, the time of travel to the upper most aquifer is 250 years. Site life of the Del Rio Landfill is approximately 21 years. So that makes the Del Rio Landfill overall site life 51 years, including the post closure period. The MULTIMED model demonstrates that the time required for the leachate to migrate from the bottom of the landfill down to the uppermost aquifer, exceeds the total site life of the landfill, including the post-closure period. As a consequence, the site meets the requirements of §330.401(d).

APPENDIX IIIN-A

MULTIMED MODEL

STATE OF TEXAS
JAMES W. ROBERTS
GEOLOGY
12639
LICENSED
PROFESSIONAL GEOSCIENTIST

06/22/2022

CITY OF DEL RIO LANDFILL

VAL VERDE COUNTY, TEXAS
TCEQ PERMIT NO. MSW-207B

MAJOR PERMIT AMENDMENT APPLICATION

TCEQ PART I APPLICATION FORM, CORE DATA FORM, AND MAILING LABELS

Prepared for
City of Del Rio

October 2020
Revision 1 January 2021
Revision 2 May 2021
Revision 3 September 2021
Revision 4 October 2021
Revision 5 January 2022
Revision 6 March 2022
Revision 7 May 2022
Revision 8 June 2022

STATE OF TEXAS
TEWOBISTA METAFERIA
123183
LICENSED
PROFESSIONAL ENGINEER

06/22/2022

Prepared by

CP&Y Inc
TPBE Registration No. F-1741
1820 Regal Row, Suite 200
Dallas, TX 75235
214-638-0500

This document is intended for permitting purposes only.

CITY OF DEL RIO LANDFILL

VAL VERDE COUNTY, TEXAS
TCEQ PERMIT NO. MSW-207B

MAJOR PERMIT AMENDMENT APPLICATION

TCEQ PART I APPLICATION FORM, CORE DATA FORM, AND MAILING LABELS

CONTENTS

PART I FORM

Signature Page

I, John A. Sheedy, IV, City Manager,
(Site Operator (Permittee/Registrant)'s Authorized Signatory) (Title)

certify under penalty of law that this document and all attachments were prepared under my direction or supervision in accordance with a system designed to assure that qualified personnel properly gather and evaluate the information submitted. Based on my inquiry of the person or persons who manage the system, or those persons directly responsible for gathering the information, the information submitted is, to the best of my knowledge and belief, true, accurate, and complete. I am aware there are significant penalties for submitting false information, including the possibility of fine and imprisonment for knowing violations.

Signature: ______________ Date: 6/22/2022

- -

TO BE COMPLETED BY THE OPERATOR IF THE APPLICATION IS SIGNED BY AN AUTHORIZED REPRESENTATIVE FOR THE OPERATOR

I, ____________________, hereby designate ________________________
(Print or Type Operator Name) (Print or Type Representative Name)

as my representative and hereby authorize said representative to sign any application, submit additional information as may be requested by the Commission; and/or appear for me at any hearing or before the Texas Commission on Environmental Quality in conjunction with this request for a Texas Water Code or Texas Solid Waste Disposal Act permit. I further understand that I am responsible for the contents of this application, for oral statements given by my authorized representative in support of the application, and for compliance with the terms and conditions of any permit which might be issued based upon this application.

____
Printed or Typed Name of Operator or Principal Executive Officer

____
Signature

- -

SUBSCRIBED AND SWORN to before me by the said John A. Sheedy, IV

On this 22nd day of June, 2022

My commission expires on the 23rd day of December 2024

ANA MARIA GIRALDO
Notary Public, State of Texas
Comm. Expires 12-23-2024
Notary ID 123965502

____
Notary Public in and for

Val Verde County, Texas
(Note: Application Must Bear Signature & Seal of Notary Public)

CITY OF DEL RIO LANDFILL

VAL VERDE COUNTY, TEXAS
TCEQ PERMIT NO. MSW-207B

MAJOR PERMIT AMENDMENT APPLICATION
PART III — SITE DEVELOPMENT PLAN

APPENDIX IIIH
SURFACE WATER DRAINAGE PLAN

Prepared for

City of Del Rio

October 2020
Revision 1 May 2021
Revision 2 October 2021
Revision 3 January 2022
Revision 4 March 2022
Revision 5 May 2022
Revision 6 June 2022

STATE OF TEXAS
TEWOBISTA METAFERIA
123183
LICENSED
PROFESSIONAL ENGINEER

Twobista Metaferia
06/22/2022

Prepared by
CP&Y Inc
TPBE Registration No. F-1741
1820 Regal Row, Suite 200
Dallas, TX 75235
214-638-0500

This document is intended for permitting purposes only.

TABLE OF CONTENTS

APPENDICES

APPENDIX IIIH-A – Permitted Condition Hydrologic Calculations

APPENDIX IIIH-B – Post-Development Condition Hydrologic Calculations

APPENDIX IIIH-C – Channel, Containment and Diversion Berm Design

APPENDIX IIIH-D – Final Cover Erosion Control Structure Design

APPENDIX IIIH-E – Erosion Layer Evaluation

DRAWINGS

- IIIH.1 – SITE DRAINAGE PATTERN RUNON/RUNOFF
- IIIH.2 – DRAINAGE STRUCTURE PLAN
- IIIH.3 – DRAINAGE DETAILS I
- IIIH.4 – DRAINAGE DETAILS II
- IIIH.5 – DRAINAGE DETAILS III
- IIIH.6 – DRAINAGE DETAILS VI
- IIIH.7 – EROSION CONTROL DETAILS
- IIIH.8 – Pond 1 Outlet Structure
- IIIH.9 – Pond 1 Cross Sections A and B
- IIIH.10 – Pond 2 Outlet Structure
- IIIH.11 – Pond 2 Cross Sections C and D
- IIIH.12 – Cross Section E
- IIIIH.13 – Cross Section F and G

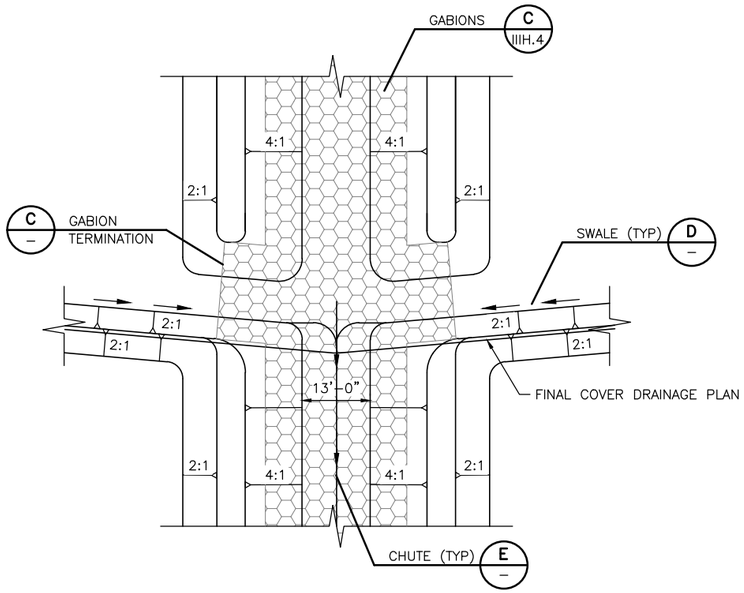

A SWALE/CHUTE CONFLUENCE (TYP)
NTS

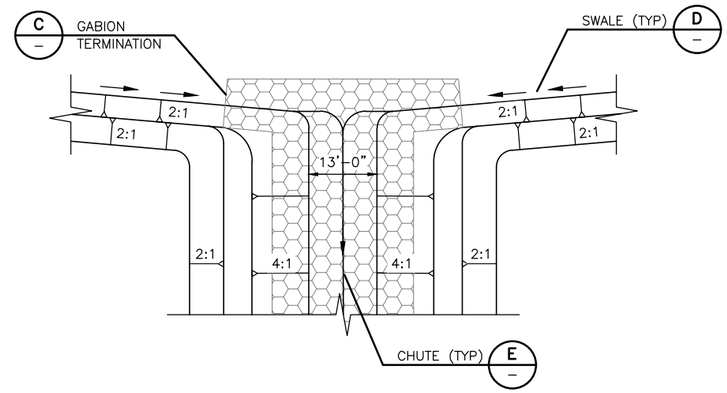

B SWALE/CHUTE CONFLUENCE (TYP)
NTS

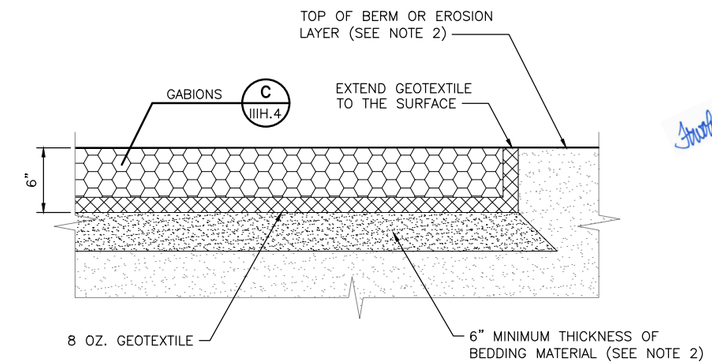

C GABION TERMINATION
NTS

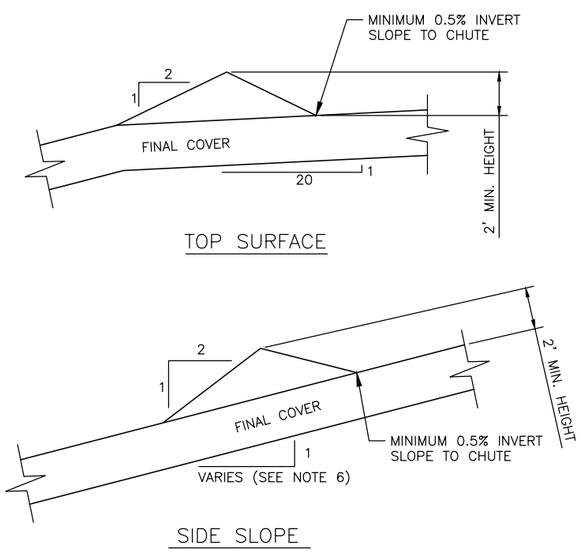

D SWALE (TYP)
NTS

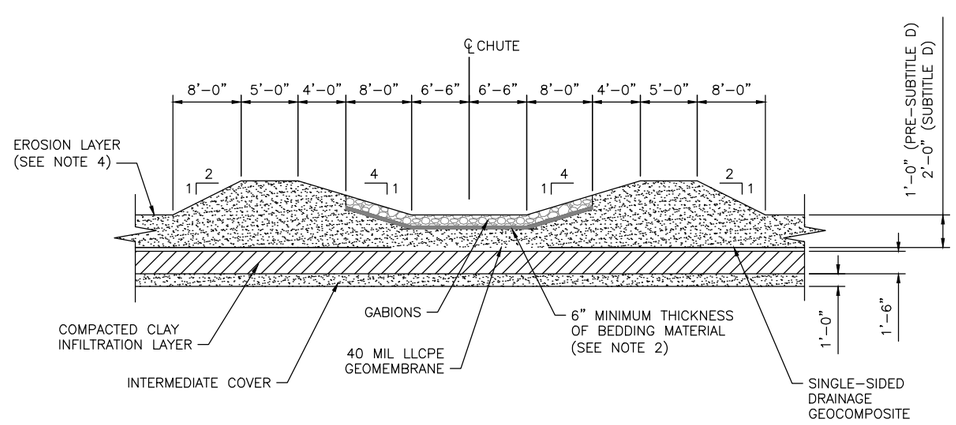

E CHUTE DETAIL
NTS

NOTES:

1. REFER TO DRAWING IIIH.2 DRAINAGE STRUCTURE PLAN FOR LOCATION OF DETAILS.
2. BEDDING MATERIAL WILL CONSIST OF CLAYEY SOILS COMPACTED TO PROVIDE FIRM BASE THAT WILL OVERLAIN BY 8 OZ/SY GEOTEXTILE PRIOR TO PLACEMENT OF GABIONS.
3. CHUTE DETAILS ARE SHOWN WITH 13 FEET OF BOTTOM WIDTH.
4. EROSION LAYER WILL BE CAPABLE OF SUSTAINING VEGETATIVE GROWTH.
5. THE EDGES OF THE INSTALLED GABIONS TIE EITHER TO THE TOP OF THE EROSION LAYER. (I.E., AT UPSTREAM END OF DRAINAGE LETDOWN) OR TO SOIL BERMS THAT ESTABLISH THE TOP OF THE DRAINAGE LETDOWN SIDE SLOPES.
6. THE SIDE SLOPES OF THE LANDFILL VARY FROM 20% TO 25% AS SHOWN ON FIGURE IIIH.2. SWALE CALCULATIONS ARE INCLUDED IN APPENDIX IIIH–D.

FOR PERMITTING PURPOSES ONLY

CP&Y, INC.
TEXAS REGISTERED ENGINEERING FIRM F-1741

CITY OF Del Rio TEXAS

STATE OF TEXAS
TEMOBISTA METAFERIA
123183
LICENSED
PROFESSIONAL ENGINEER
06/22/2022

NO.	REVISION	BY	DATE
1.	7TH NOD	TM	06/2022

VERIFY SCALE 0 1"
BAR IS ONE INCH ON ORIGINAL DRAWING. IF NOT ONE INCH ON THIS SHEET, ADJUST SCALE

CITY OF DEL RIO
VAL VERDE COUNTY, TEXAS
MUNICIPAL SOLID WASTE LANDFILL NO. 207B
MAJOR PERMIT AMENDMENT
DRAINAGE DETAILS I

Date: OCTOBER 2020
Designed: T. METAFERIA
Drawn: J. TORRES
Reviewed: B. HINDMAN
CP&Y Proj. No. DELR1900546

FIGURE
IIIH.3

REFERENCES: DELR1900546 Border Base Permit.dwg DELR1900546_Std ENVIRO SEALS.dwg DELR1900546_CIVIL_DETAILS.dwg _Std ENVIRO SEALS
Jun 22, 2022 – 9:57am C:\pwworking\cpy\pw_cpy\tmetaferia\d0804194\DELR1900546 Figure IIIH.3.dwg LAYOUT: Layout1 USER:

CROSS SECTION E

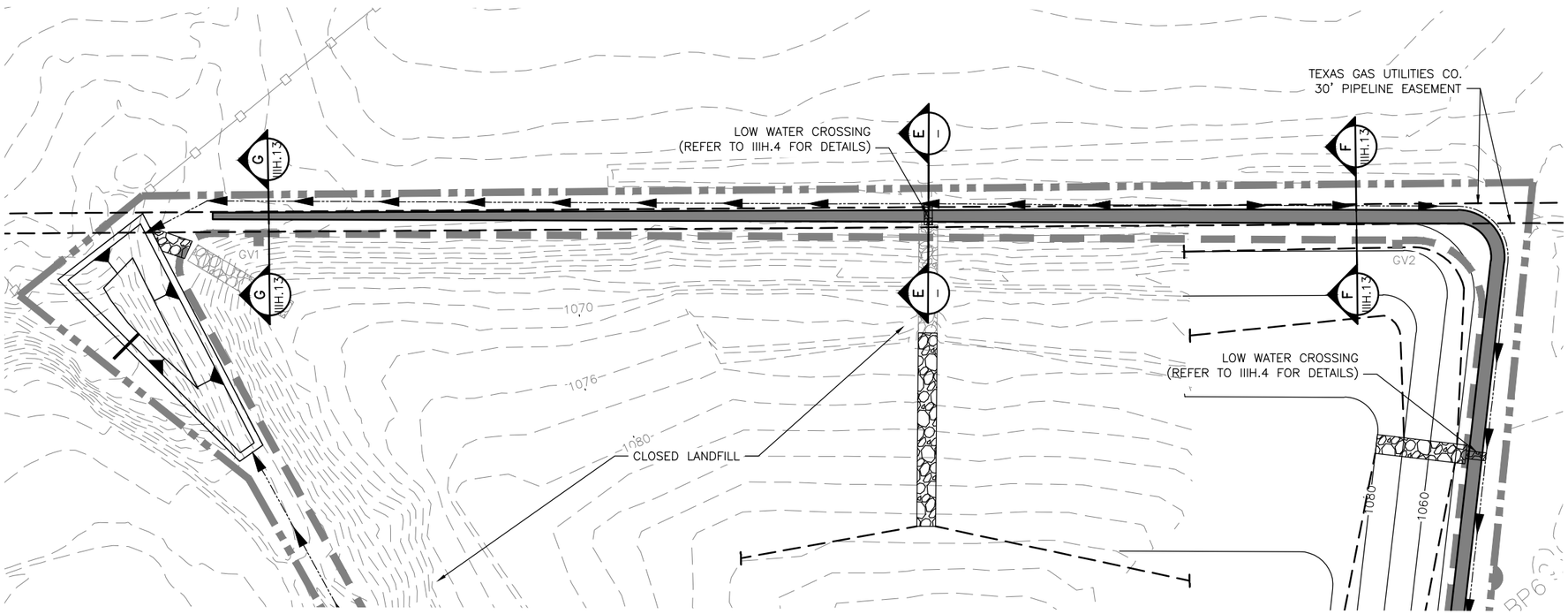

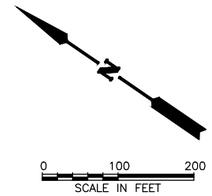

LEGEND

- PERMIT BOUNDARY
- LIMIT OF WASTE
- 1084 EXISTING CONTOURS
- SWALES
- PERIMETER CHANNEL
- CHUTES
- EXISTING CHUTE
- PROPOSED ACCESS ROAD

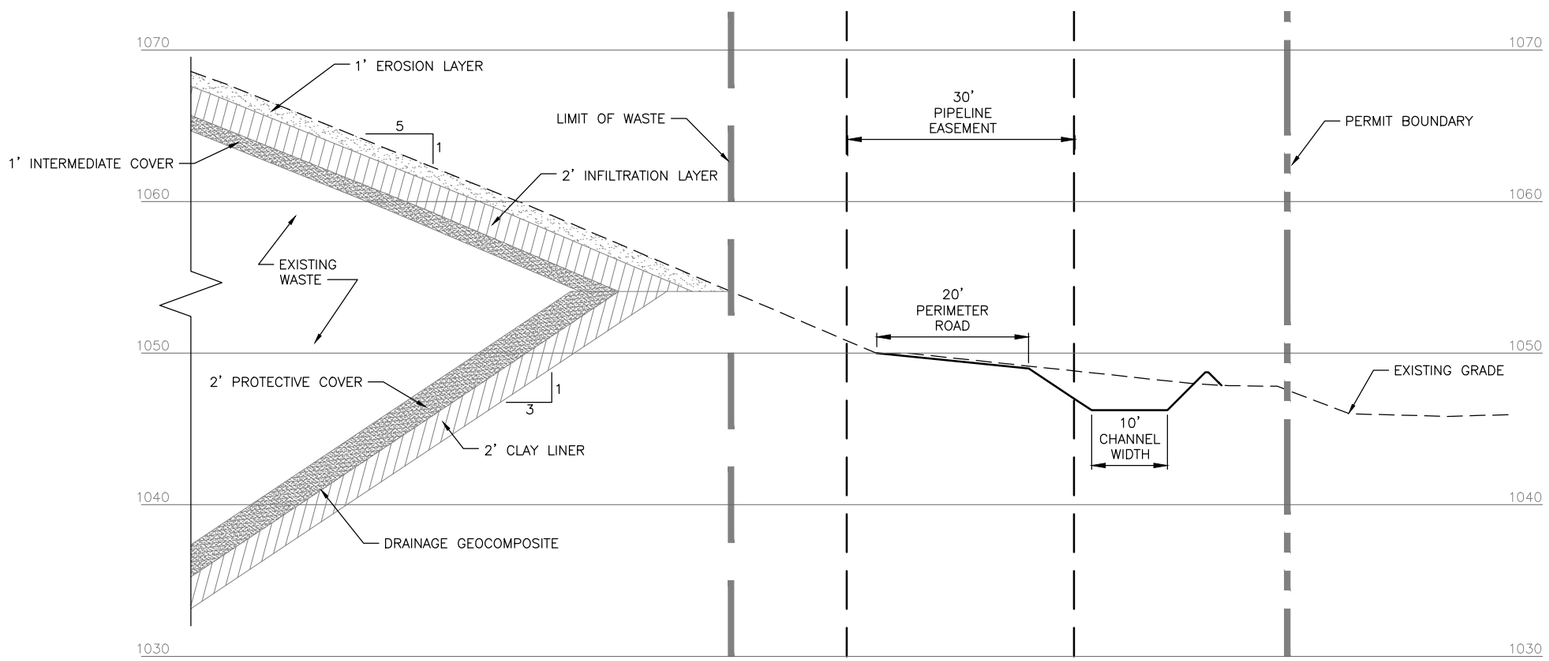

E — SECTION

0 10 20
SCALE IN FEET

0 5 10
SCALE IN FEET (VERTICAL)

FOR PERMITTING PURPOSES ONLY

CP&Y, INC.
TEXAS REGISTERED ENGINEERING FIRM F-1741

CITY OF Del Rio TEXAS

STATE OF TEXAS
TEMOBISTA METAFERIA
123183
LICENSED
PROFESSIONAL ENGINEER
06/22/2022

NO.	REVISION	BY	DATE
2.	7TH NOD	TM	06/2022
1.	NEW DRAWING	TM	03/2022

VERIFY SCALE BAR IS ONE INCH ON ORIGINAL DRAWING. IF NOT ONE INCH ON THIS SHEET, ADJUST SCALE
0 1"

CITY OF DEL RIO
VAL VERDE COUNTY, TEXAS
MUNICIPAL SOLID WASTE LANDFILL NO. 207B
MAJOR PERMIT AMENDMENT
CROSS SECTION E

Date: MARCH 2022
Designed: T. METAFERIA
Drawn: T. METAFERIA
Reviewed: B. HINDMAN
CP&Y Proj. No. DELR1900546

FIGURE
IIIH.12

REFERENCES: DELR1900546 Border Base Permit.dwg DELR1900546_Std ENVIRO SEALS.dwg DELR1900546_ECBASE.dwg DELR1900546_ECBASE_LF AREA COMPOSITE.dwg DELR1900546 Figure IIIH.12.dwg LAYOUT: Layout1 USER:
Jun 22, 2022 – 1:34pm C:\pwworking\cpy\pw_cpy\tmetaferia\d0804194\DELR1900546 Figure IIIH.12.dwg DELR1900546_Std ENVIRO SEALS

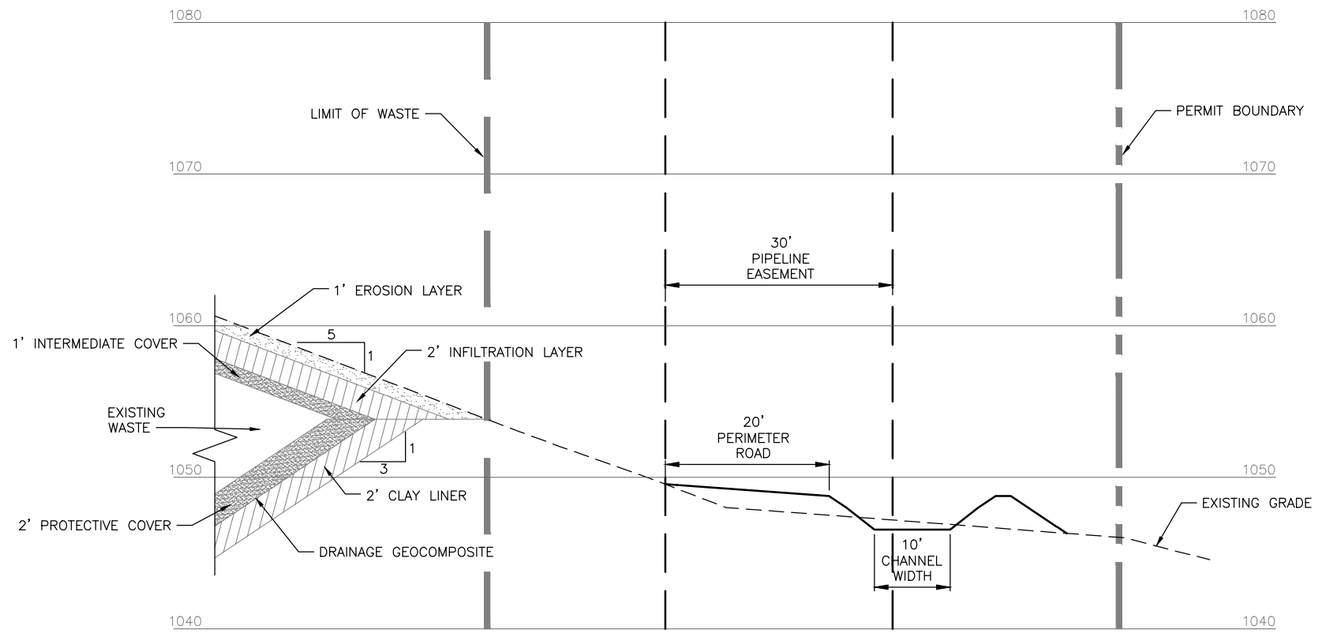

F
IIH-12
SECTION

0 10 20
SCALE IN FEET

0 5 10
SCALE IN FEET (VERTICAL)

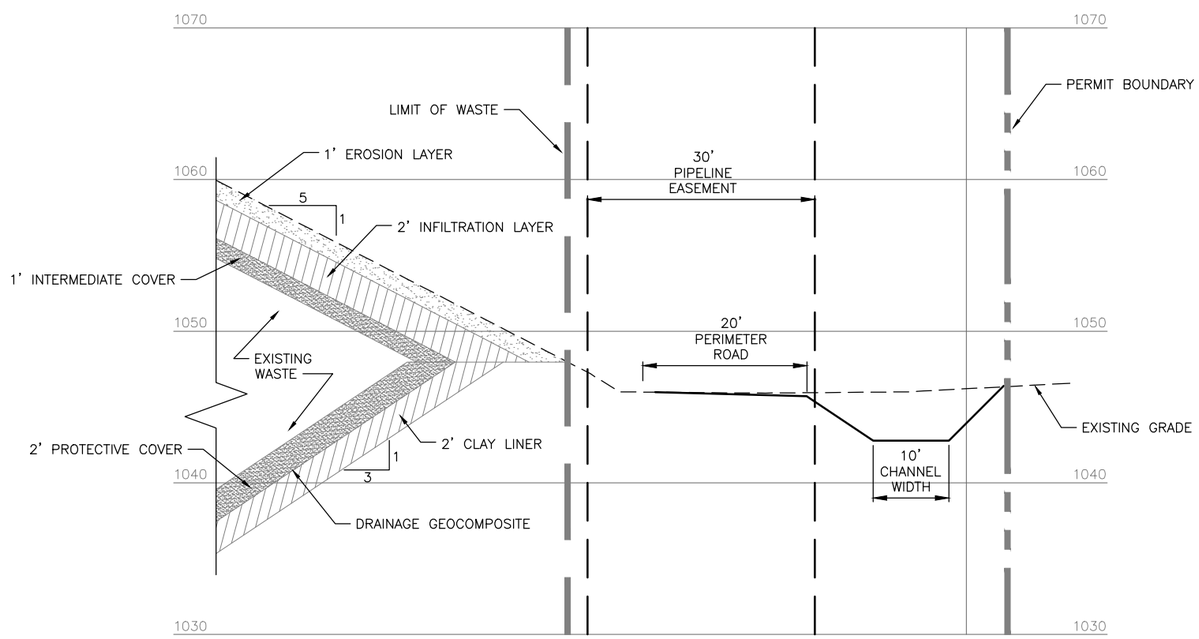

G
IIH-12
SECTION

0 10 20
SCALE IN FEET

0 5 10
SCALE IN FEET (VERTICAL)

FOR PERMITTING PURPOSES ONLY

CP&Y, INC.
TBPE REGISTERED ENGINEERING FIRM F-1741

CITY OF Del Rio TEXAS

Smokite Metaferia 6/22/2022

STATE OF TEXAS
TEMOBISTA METAFERIA
123183
LICENSED
PROFESSIONAL ENGINEER

NO.	REVISION	BY	DATE
1.	NEW DRAWING	TM	06/2022

VERIFY SCALE BAR IS ONE INCH ON ORIGINAL DRAWING. IF NOT ONE INCH ON THIS SHEET, ADJUST SCALE
0 1"

CITY OF DEL RIO
VAL VERDE COUNTY, TEXAS
MUNICIPAL SOLID WASTE LANDFILL NO. 207B
MAJOR PERMIT AMENDMENT

CROSS SECTION F AND G

Date: JUNE 2022
Designed: T. METAFERIA
Drawn: T. METAFERIA
Reviewed: B. HINDMAN
CP&Y Proj. No. DELR1900546

FIGURE
IIIH.13

REFERENCES: DELR1900546 Border Base Permit.dwg DELR1900546_Std ENVIRO SEALS.dwg DELR1900546_ECBASE.dwg DELR1900546_ECBASE_LF AREA COMPOSITE.dwg DELR1900546 Figure IIIH.13.dwg LAYOUT: Layout1 USER:
Jun 22, 2022 – 1:44pm C:\pwworking\cpy\cpy_cpy\tmetaferia\d0804194\DELR1900546 _Std ENVIRO SEALS

APPENDIX IIIH-C
CHANNEL, CONTAINMENT AND DIVERSION BERM DESIGN

Client: City of Del Rio
Project: Major Permit Amendment
Description: Perimeter Channel Design

Date: 3/16/2022
Job No: DELR1900546
By: T. Metaferia
Checked By: B. Hindman

Purpose - To design perimeter channels to contain stormwater runoff from the 25-year frequency storm events.

Perimeter channels have been designed to contain stormwater runoff from the 25-year frequency storm events.

Channel	Station		Flow Rate (cfs)	Bottom Slope %	Bottom Width (ft)	Side Slope (ft/ft) Right	Left	Normal Depth (ft)	Flow Vel. (fps)	Fronde No.	Vel. Head (ft)	Specific Energy (ft)	Flow Area (sq.ft.)	Top width of Flow (ft)
	0+00.00	2+27.07	206.6	0.25%	10	3	3	2.90	3.28	0.48	0.23	3.12	54.15	27.38
CH1	2+27.07	16+48.45	82.2	0.25%	10	3	3	1.81	2.95	0.45	0.14	1.94	27.86	20.84
	0+00.00	7+67.69	323.4	0.65%	10	2	2	3.36	5.76	0.66	0.52	3.87	56.16	23.44
	7+67.69	8+72.43	323.4	1.50%	10	2	2	2.46	8.81	1.14	1.20	3.37	36.73	19.84
CH2	8+72.43	9+35.38	323.4	1.30%	10	2	2	2.56	8.37	1.07	1.09	3.65	38.66	20.23
	9+35.38	11+53.65	323.4	0.85%	10	2	2	2.86	7.19	0.87	0.80	3.66	45.01	21.45
	11+53.65	24.+63.99	87.8	0.46%	10	2	2	1.67	3.95	0.60	0.24	1.91	22.24	16.67
CH3	0+00.00	10+66.16	70.3	0.43%	10	3	3	1.44	3.41	0.57	0.18	1.62	20.59	18.63
CH4	0+00.00	15+71.63	99.4	0.35%	10	3	2	1.87	3.61	0.53	0.20	2.08	27.52	19.37
CH5	0+00.00	6+64.79	84.0	0.50%	6	3	3	1.84	3.96	0.63	0.24	2.08	21.21	17.05
CH6	0+00.00	9+52.13	67.0	0.50%	3	3	3	1.97	3.81	0.62	0.23	2.20	17.57	14.83
CH7	0+00.00	3+27.78	12.8	1.00%	0	3	3	1.14	3.29	0.77	0.17	1.31	3.89	6.84

Note:
1. Calculations were performed using Bentley FlowMaster.
2. n = 0.03 (Manning Coefficient) is used for the calculations.

Channel Erosion Control Design:

Channel erosion controls have been designed for flow velocities resulted from the 25-year frequency flow rates. As shown on above velocities in the perimeter channels range from 2.53 ft/s to 8.81 ft/s. All

The following was used to select the type of channel lining material.

- Vegetation - used in all areas where velocities are less than 5 ft/s for channels.
- Turf reinforcement matting - used in channels for velocities between 5 ft/s and 13 ft/s.

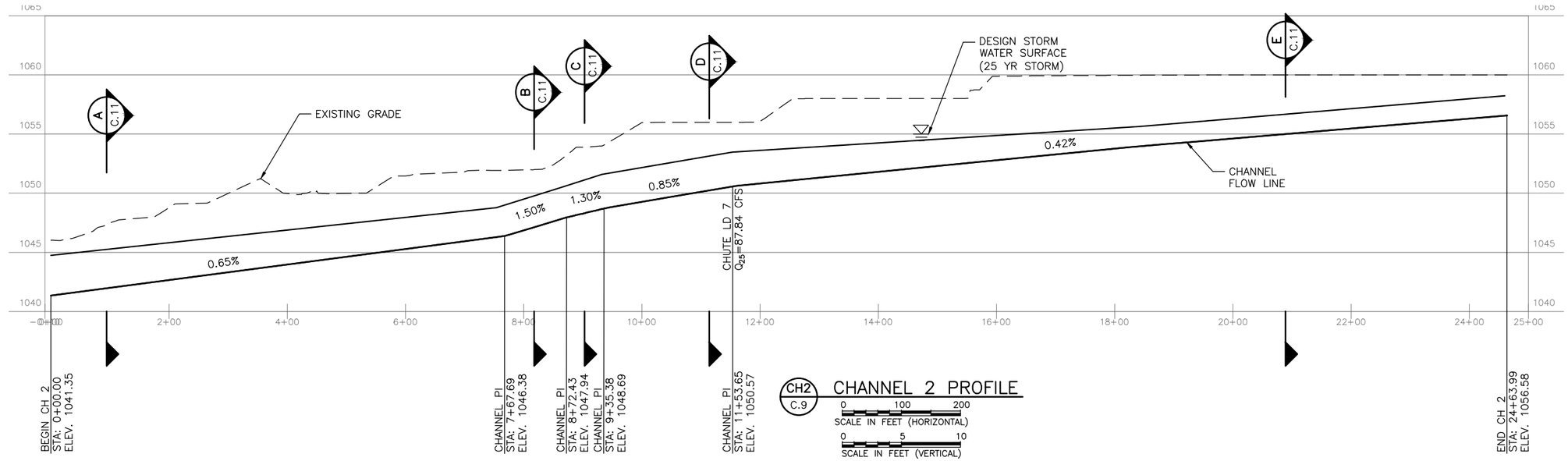

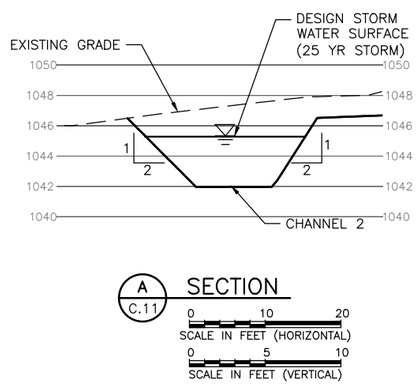

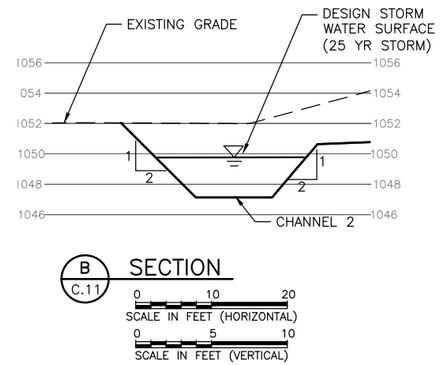

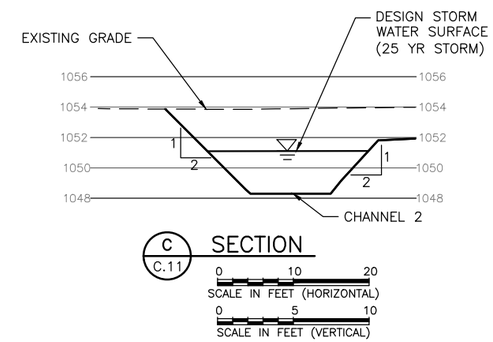

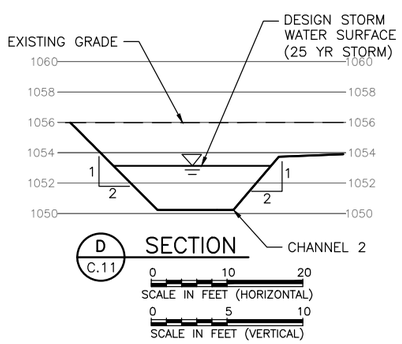

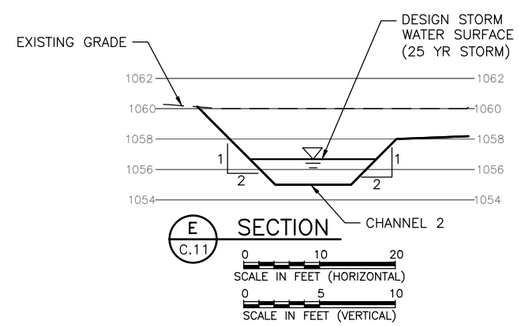

Channel	Station	Bottom Width (ft)	Flow Rate (cfs)	Bottom Slope %	Flow Vel. (fps)	Normal Depth (ft)
0+00.00	7+67.69	10	323.4	0.65%	5.76	3.36
7+67.69	8+72.43	10	323.4	1.50%	8.81	2.46
8+72.43	9+35.38	10	323.4	1.30%	8.37	2.56
9+35.38	11+53.65	10	323.4	0.85%	7.19	2.86
11+53.65	24.+63.99	10	87.8	0.46%	3.95	1.67

THE FOLLOWING WAS USED TO SELECT THE TYPE OF CHANNEL LINING MATERIAL
- VEGETATION WILL BE USED IN ALL AREAS WHERE VELOCITIES ARE LESS THAN 5 FT/S.
- TURF REINFORCEMENT MATTING WILL BE USED IN CHANNEL SECTIONS THAT HAVE VELOCITIES BETWEEN 5 FT/S AND 13 FT/S.

FOR PERMITTING PURPOSES ONLY

CP&Y, INC.
TEXAS REGISTERED ENGINEERING FIRM F-1741

CITY OF Del Rio TEXAS

06/22/2022
STATE OF TEXAS TEMOBISTA METAFERIA 123183 LICENSED PROFESSIONAL ENGINEER

NO.	REVISION	BY	DATE
2.	7TH NOD	TM	06/2022
1.	6TH NOD	TM	05/2022

VERIFY SCALE BAR IS ONE INCH ON ORIGINAL DRAWING. IF NOT ONE INCH ON THIS SHEET, ADJUST SCALE
0 1"

CITY OF DEL RIO
VAL VERDE COUNTY, TEXAS
MUNICIPAL SOLID WASTE LANDFILL NO. 207B
MAJOR PERMIT AMENDMENT

CHANNEL 2 PROFILE AND CROSS SECTIONS

Date: MAY 2022
Designed: T. METAFERIA
Drawn: T. METAFERIA
Reviewed: B. HINDMAN
CP&Y Proj. No. DELR1900546

FIGURE
IIIH–C.11

REFERENCES: DELR1900546_PCBASE.dwg DELR1900546 Border Base Permit.dwg DELR1900546_Std ENVIRO SEALS.dwg _Std ENVIRO SEALS.dwg DELR1900546_Channel
Jun 22, 2022 – 2:35pm C:\pwworking\cpy\pw_cpy\tmetaferia\d0804194\DELR1900546 Figure IIIH–C–11.dwg LAYOUT: Layout1 USER:

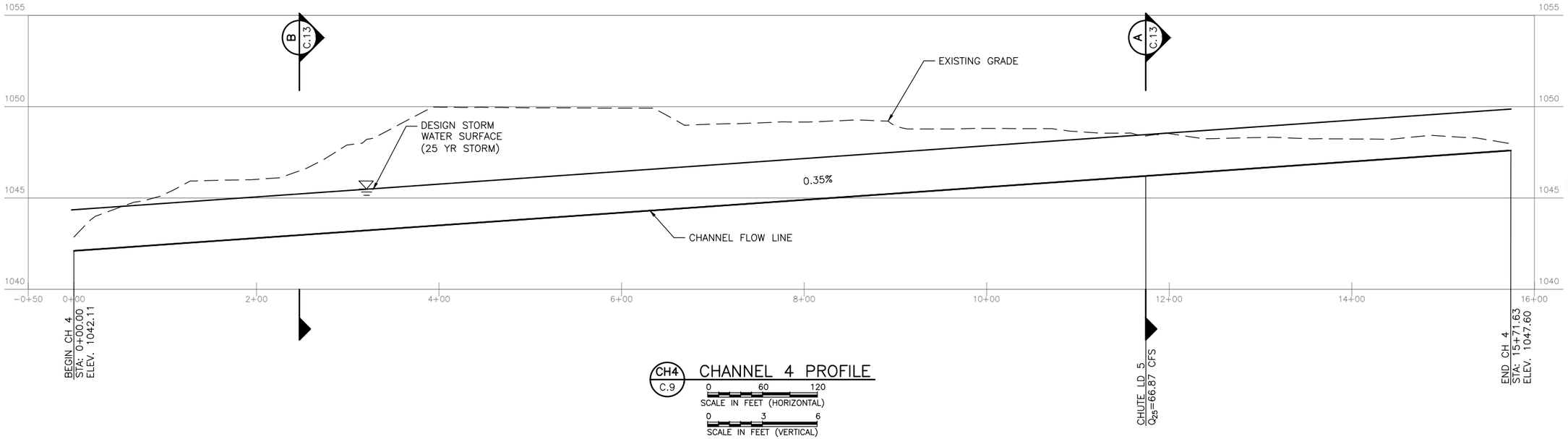

CH4 C.9 CHANNEL 4 PROFILE

0 60 120
SCALE IN FEET (HORIZONTAL)

0 3 6
SCALE IN FEET (VERTICAL)

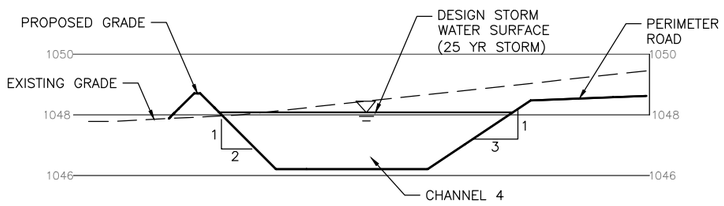

A C.13 SECTION

0 5 10
SCALE IN FEET (HORIZONTAL)

0 2.5 5
SCALE IN FEET (VERTICAL)

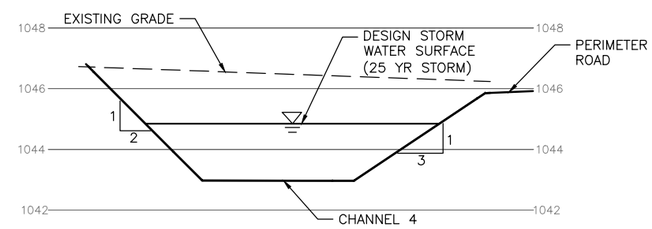

B C.13 SECTION

0 5 10
SCALE IN FEET (HORIZONTAL)

0 2.5 5
SCALE IN FEET (VERTICAL)

Channel	Station	Bottom Width (ft)	Flow Rate (cfs)	Bottom Slope %	Flow Vel. (fps)	Normal Depth (ft)
0+00.00	15+71.63	10	99.4	0.35%	3.61	1.87

THE FOLLOWING WAS USED TO SELECT THE TYPE OF CHANNEL LINING MATERIAL
- VEGETATION WILL BE USED IN ALL AREAS WHERE VELOCITIES ARE LESS THAN 5 FT/S.
- TURF REINFORCEMENT MATTING WILL BE USED IN CHANNEL SECTIONS THAT HAVE VELOCITIES BETWEEN 5 FT/S AND 13 FT/S.

FOR PERMITTING PURPOSES ONLY

CP&Y, INC.
TEXAS REGISTERED ENGINEERING FIRM F-1741

CITY OF Del Rio TEXAS

STATE OF TEXAS
TEMOBISTA METAFERIA
123183
LICENSED PROFESSIONAL ENGINEER
06/22/2022

NO.	REVISION	BY	DATE
2.	7TH NOD	TM	06/2022
1.	6TH NOD	TM	05/2022

VERIFY SCALE BAR IS ONE INCH ON ORIGINAL DRAWING. IF NOT ONE INCH ON THIS SHEET, ADJUST SCALE
0 1"

CITY OF DEL RIO
VAL VERDE COUNTY, TEXAS
MUNICIPAL SOLID WASTE LANDFILL NO. 207B
MAJOR PERMIT AMENDMENT

CHANNEL 4 PROFILE AND CROSS SECTIONS

Date: MAY 2022
Designed: T. METAFERIA
Drawn: T. METAFERIA
Reviewed: B. HINDMAN
CP&Y Proj. No. DELR1900546

FIGURE
IIIH–C.13

REFERENCES: DELR1900546_PCBASE.dwg DELR1900546 Border Base Permit.dwg DELR1900546_Std ENVIRO SEALS.dwg DELR1900546_Std ENVIRO SEALS.dwg DELR1900546_Channel
Jun 22, 2022 – 1:28pm C:\pwworking\cpy\pw_cpy\tmetaferia\d0804194\DELR1900546 Figure IIIH–C–13.dwg LAYOUT: Layout1 USER:

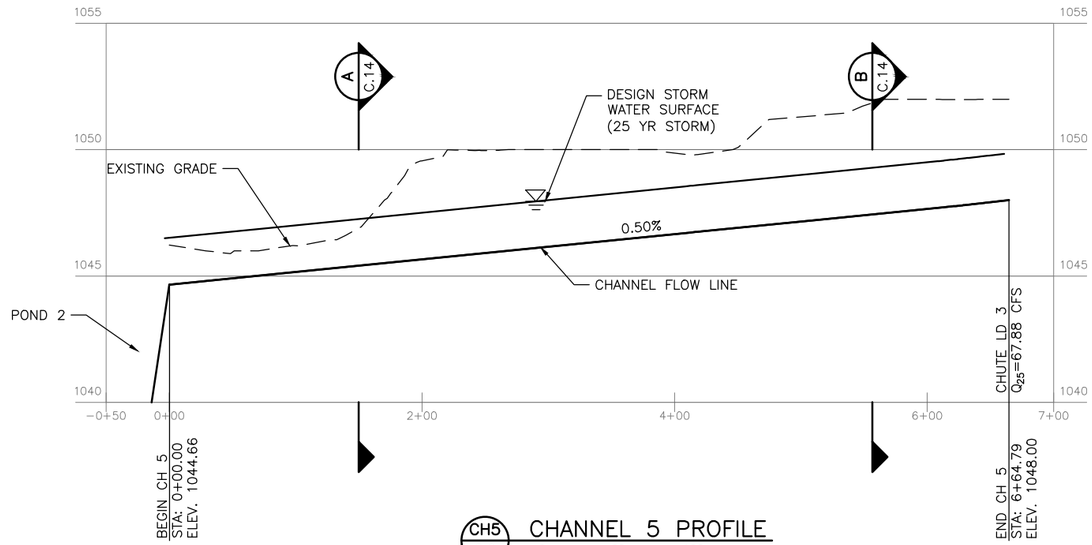

CH5 C.9 CHANNEL 5 PROFILE

SCALE IN FEET (HORIZONTAL): 0 60 120

SCALE IN FEET (VERTICAL): 0 3 6

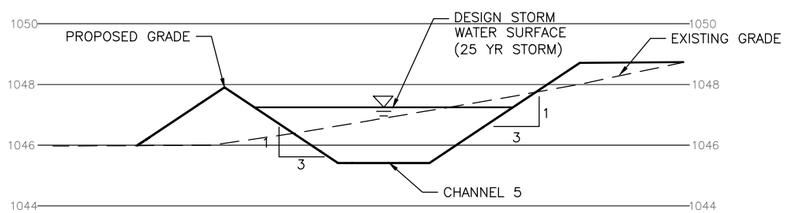

A C.14 SECTION

SCALE IN FEET (HORIZONTAL): 0 5 10

SCALE IN FEET (VERTICAL): 0 2.5 5

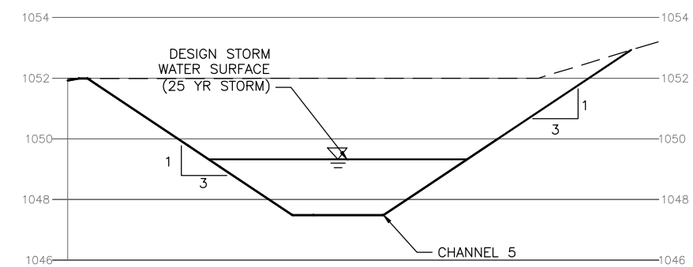

B C.14 SECTION

SCALE IN FEET (HORIZONTAL): 0 5 10

SCALE IN FEET (VERTICAL): 0 2.5 5

Channel Station		Bottom	Peak Flow	Slope	Velocity	Flow Depth
From	To	Width (ft)	(cfs)	(%)	(ft/s)	(ft)
0+00.00	6+64.79	6	84	0.5	3.96	1.84

THE FOLLOWING WAS USED TO SELECT THE TYPE OF CHANNEL LINING MATERIAL

- VEGETATION WILL BE USED IN ALL AREAS WHERE VELOCITIES ARE LESS THAN 5 FT/S.
- TURF REINFORCEMENT MATTING WILL BE USED IN CHANNEL SECTIONS THAT HAVE VELOCITIES BETWEEN 5 FT/S AND 13 FT/S.

FOR PERMITTING PURPOSES ONLY

CP&Y, INC.
TBPE REGISTERED ENGINEERING FIRM F-1741

CITY OF Del Rio TEXAS

Timothy Metaferia 06/22/2022

STATE OF TEXAS TIMOTHY METAFERIA 123183 LICENSED PROFESSIONAL ENGINEER

NO.	REVISION	BY	DATE
2.	7TH NOD	TM	06/2022
1.	6TH NOD	TM	05/2022

VERIFY SCALE 0 1" BAR IS ONE INCH ON ORIGINAL DRAWING. IF NOT ONE INCH ON THIS SHEET, ADJUST SCALE

CITY OF DEL RIO
VAL VERDE COUNTY, TEXAS
MUNICIPAL SOLID WASTE LANDFILL NO. 207B
MAJOR PERMIT AMENDMENT

CHANNEL 5 PROFILE AND CROSS SECTIONS

Date: MAY 2022
Designed: T. METAFERIA
Drawn: T. METAFERIA
Reviewed: B. HINDMAN
CP&Y Proj. No. DELR1900546

FIGURE

IIIH–C.14

REFERENCES: DELR1900546_PCBASE.dwg DELR1900546 Border Base Permit.dwg DELR1900546_Std ENVIRO SEALS.dwg _Std ENVIRO SEALS.dwg DELR1900546
Jun 22, 2022 – 3:57pm C:\pwworking\cpy\ym_cpy\tmetaferia\d0804194\DELR1900546 Figure IIIH-C-14.dwg LAYOUT: Layout1 USER:

APPENDIX IIIH-D
FINAL COVER EROSION CONTROL STRUCTURE DESIGN

Figures IIIH-D-1 and IIIH-D-11

TABLE OF CONTENTS

1 DRAINAGE SWALE DESIGN

Typical Swale Design Summary:

- Typical swale drainage areas analyzed are shown on sheet IIIH-D-2.
- Hydraulic calculations are summarized on page IIIH-D-4.
- Maximum normal depth is 1.43 feet (Drainage Area SW3).
- Maximum flow velocity is 2.70 fps (Drainage Area SW3).
- Vegetation will be established on the swales to protect against erosion.

Typical swale drainage areas were selected such that all slope conditions (5% and 25%) are included in this analysis. The swales analyzed on sheet IIIH-D-2 were selected to include the swales that have the largest drainage area on the top slope (SW1) and side slope (SW3). All swales will be constructed to be a minimum of 2 feet tall as shown in Detail D on Figure IIIH.3. As mentioned above the maximum normal depth is 1.43 feet therefore the 2 feet swale will be adequate for all the swale drainage areas.

CITY OF DEL RIO LANDFILL

VAL VERDE COUNTY, TEXAS
TCEQ PERMIT NO. MSW-207B

MAJOR PERMIT AMENDMENT APPLICATION
PART III — SITE DEVELOPMENT PLAN

APPENDIX IIIK
WASTE CONTAINMENT POINT OF COMPLIANCE

Prepared for

City of Del Rio

October 2020
Revision 1 May 2021
Revision 2 October 2021
Revision 3 January 2022
Revision 4 March 2022
Revision 5 May 2022
Revision 6 June 2022

Prepared by
CP&Y Inc
TPBE Registration No. F-1741
1820 Regal Row, Suite 200
Dallas, TX 75235
214-638-0500

This document is intended for permitting purposes only.

TABLE OF CONTENTS

TABLES

FIGURES

APPENDIX

Table 6-2 – Chemical Specific Data

Variable Name	Unit	Value	Comments
Solid phase decay coefficient	1/yr	0	Not used
Dissolved phase decay coefficient	1/yr	0	Not used
Chemical decay coefficient	1/yr	0	Not used
Acid catalyst hydrolysis constant	l/m-yr	0	Not used
Neutral hydrolysis rate constant	1/yr	0	Not used
Base catalyst hydrolysis constant	l/m-yr	0	Not used
Reference temperature	C	25	Not used
Normalized distribution coefficient	ml/g	0	Simulation is steady state, with no chemical decay
Distribution coefficient	ml/g		Derived by MULTIMED.
Biodegradation coefficient	1/yr	0	Biodegradation not allowed by TCEQ

Site specific data was used to determine the source specific variables in the model. Tabel 6-3 lists the source specific data used for the base model. The infiltration rate is the net amount of leachate that percolates into the aquifer system from the landfill.

As noted in Section 6.1, the HELP model was used to estimate the infiltration rate of the Del Rio Landfill. The HELP models for the infiltration rate are included in Appendix IIIK-A. The recharge rate is the net amount of water that percolates directly into the aquifer system outside of the land disposal facility. The recharge is assumed to have no contamination and hence dilutes the groundwater contaminate plume. The HELP model was also used to calculate the rainfall recharge rate for the Del Rio Clay. The HELP output is included in Appendix IIIK-B.

The limits of waste, which is approximately 79 acres, was used to set the area of disposal unit in the module. Since the area of the disposal unit was identified, the length and width of the scale of the facility were derived by MULTIMED. The initial concentration at landfill was set to one as is typical when calculating the DAF.

Table 6-3 – Source Specific Data

Variable Name	Unit	Value	Comments
Infiltration rate	m/yr	1.7×10^{-4}	Derived from HELP (Appendix IIIK-A)
Area of disposal unit	m^2	320,000	Limits of waste area
Spread of contaminant source	m	-	Derived by MULTIMED.
Recharge rate	m/yr	0.0282	Derived from HELP (Appendix IIIN-B)
Initial concentration at landfill	mg/l	1.0	Set at 1.0 to find DAF
Length scale of facility	m	-	Derived by MULTIMED.
Width scale of facility	m	-	Derived by MULTIMED.

The last module of inputs for the MULTIMED model is the aquifer specific parameters. The aquifer porosity, bulk density, and hydraulic conductivity are all obtained from Appendix E of the July 1994 TETCO Geotechnical Report. The particle diameter was obtained using Table 6-10 of the Manual for the Multimedia Exposure Assessment Model. Although the particle diameter is specified in the model it is not used for calculation since the aquifer porosity has been specified. The well distance is set to 100 feet at the POC. The other values in this module were derived by MULTIMED as shown in Table 6-4.

Table 6-4 – Aquifer Specific Data

Variable Name	Unit	Value	Comments
Particle diameter	cm	0.025	Obtained from Table 6-10 of the Manual for the Multimedia Exposure Assessment Model.
Aquifer porosity	unitless	0.10	Obtained from the TETCO Geotechnical Report
Bulk density	g/cc	2.40	Obtained from the TETCO Geotechnical Report
Aquifer thickness	m	91.4	Thickness of the Salmon Peak. Obtained from the TETCO Geotechnical Report. See Figure 3-1 in this appendix.
Mixing zone depth	m		Derived by MULTIMED.
Hydraulic conductivity	m/yr	100	Obtained from the TETCO Geotechnical Report (50 to 500 m/yr)
Hydraulic gradient	unitless	0.011	Section 4.1 of Appendix IIIN.
Groundwater seepage velocity	m/yr		Derived by MULTIMED.
Retardation coefficient	unitless	-	Derived by MULTIMED.
Longitudinal dispersity	m	-	Derived by MULTIMED.
Transversal dispersity	m	-	Derived by MULTIMED.
Vertical dispersity	m	-	Derived by MULTIMED.
Organic carbon content	%	0.003	Conservative assumption.
Receptor well distance	m	30	POC as shown in Figure 7.1

6.2.2 Sensitivity Analysis

The conservative base model, described in Section 6.2.1, was altered to test the sensitivity to the following parameters:

- Aquifer hydraulic conductivity (Aquifer Module)
- Aquifer thickness (Aquifer Module)
- Aquifer porosity (Aquifer Module)
- Hydraulic gradient (Aquifer Module)
- Receptor well distance/distance to POC (Aquifer Module)
- Infiltration rate (Source Module)
- Recharge rate (Source Module)

The base model calculated DAF is 290. Table 6-5 shows the input parameters that were altered to test the model sensitivity. Two values were selected for each parameter shown in Table 6-5 to test the sensitivity of the model. One value being higher and one being lower than the number being used in the base model.

Table 6- 5– Sensitivity of Parameters to DAF

Variable Name	Sensitivity Values	DAF*
Aquifer hydraulic conductivity	50 m/yr	147
	150 m/yr	434
Aquifer thickness	50 m	243
	125 m	289
Aquifer porosity	0.05	290
	0.506	290
Hydraulic gradient	0.024 ft/ft	630
	0.006 ft/ft	160
Receptor well distance	24.4 m	290
	36.6 m	291
Infiltration rate	2.5×10^{-4} m/yr	198
	7.0×10^{-5} m/yr	705
Recharge rate	0.01820 m/yr	290
	0.0382 m/yr	291

*The base model DAF is 290.

The base model was varied 15 times to evaluate the sensitivity to various model parameters shown in Table 6-5. Aquifer hydraulic conductivity, hydraulic gradient, and infiltration rate were the three parameters that impacted the DAF calculations the most. The hydraulic conductivity was varied by a magnitude of 50 meters to test the sensitivity of the model. The increase in hydraulic conductivity leads to a high DAF since most of dilution occurs beneath the landfill and the high hydraulic conductivity leads to higher Darcy flux. The change in the hydraulic gradient input also considerably varied the DAF calculations. The low hydraulic gradient means low water flow resulting in a low DAF. A fast-moving water flow (high hydraulic gradient) results in a high DAF, because the dilution beneath the landfill increases faster than dilution in the aquifer. The last parameter that impacted the DAF was the infiltration rate. As the infiltration rate increases the DAF decreased due to the increased amount of contaminates in the water. The aquifer thickness, aquifer porosity, receptor well distance, and recharge rate did not significantly impact the DAF. The output files for the MULTIMED runs are included in Appendix IIIK-C.

7 MODEL INPUT PARAMETERS

Appendices IIIK-A through IIIK-C present detailed information about the HELP and MULTIMED models and liner leakage calculations. Conservative assumptions were made in determining the recharge rate, percolation rate, and the dilution attenuation factor (DAF). The results of the leachate generation model utilizing the HELP Model are included in Appendix IIIK-A. The HELP model input parameters for determining the recharge rate through the Del Rio Clay and percolation is detailed in Appendix IIIK-B.

The MULTIMED model input parameters are detailed in Appendix IIIK-C. The POC for this demonstration is shown on Figure 7.1. The POC as defined by §330.3(108) is a vertical surface located no more than 500 feet from the hydraulically downgradient limit of the waste management unit boundary, extending down

8 RESULTS AND CONCLUSIONS

As shown in the HELP Model Summary Sheets included in Appendix IIIK-A (pages IIIK-A-4A and IIIK-A-4B) the approved alternative liner containment design has the highest leachate percolation compared to the overliner. The liner leakage rate estimated using the HELP model was used as an infiltration rate input in the MULTIMED model in conjunction with the recharge rate, calculated in Appendix IIIK-B, to evaluate the performance of the approved alternate liner system design by estimating constituent concentrations at the POC. The constituent concentrations at the base of the landfill liner and at the POC were used to calculate the DAF. The approved alternate liner must provide a DAF of 260 at the point of compliance.

The results of the alternate liner design base model demonstration are provided below:

- POC distance = 100 ft was used in the model as shown in Figure 7.1.
- Liner leakage rate from HELP model = 1.7×10^{-4} m/yr (this value was used as infiltration rate input into the MULTIMED models)
- DAF = 290

Table 6-5 shows the all the MULTIMED simulations that were run for this project with the different parameters. As shown in the Table 6-5 the simulations all demonstrate compliance with the minimum dilution factor required for an alternative liner demonstration. The DAF values from the different simulations range from 147 to 705. It should also be noted that the leachate quality at Del Rio Landfill, as shown in Table 3-2, is at or lower than the MCL values set in 330.331(a)(1). The predicted concentrations of the selected leachate chemical constituents do not exceed maximum contaminant levels in the perched groundwater zone at the point of compliance for either the approved alternate liner or the pre-Subtitle D overliner areas.

APPENDIX IIIK-A

LEACHATE GENERATION MODEL

LEACHATE GENERATION MODEL

HELP MODEL

The Hydrologic Evaluation of Landfill Performance (HELP) Model, Version 4.0 was used to estimate quantity of leachate that will be generated during the active life and post-closure period of the Del Rio Landfill. The HELP Model is a quasi-two-dimensional hydrologic model of water movement across, into, through, and out of the landfill. The model uses climate, soil, and landfill design data to perform a solution technique that accounts for the effects of surface storage, runoff, infiltration, percolation, soil moisture storage, evapotranspiration, and lateral drainage.

MODEL SETUP

The site was modeled as a 1-acre unit area for the following stages of landfill development in developed and undeveloped Subtitle D areas:

Table 1-1 – Landfill Conditions Modeled in HELP

Area	Interim Condition 23-Year Timeframe	Closed Condition 30-Year Timeframe
Subtitle D Area	50 feet of waste with intermediate cover	80 feet of waste with final cover
Pre-Subtitle D with Overliner Area	60 feet of waste with intermediate cover	60 feet of waste with final cover

The active stage was modeled for one year with intermediate or daily cover. The interim stages with intermediate cover were modeled for 23 years based on the approximate projected site life. The closed landfill condition was modeled for 30 years. The evaporative zone depth was selected to be 12 inches. The leaf area index was selected to be 2 for the interim cases and 4.5 for the closed case based on the selected ground area. The evaporative zone depth and leaf area index numbers were obtained from the Figures provided in Appendix F of EPA's Hydrologic Evaluation of landfill Performance: HELP 4.0 User Manual. The Soil Conservation Service (SCS) runoff curve numbers were calculated by HELP based on soil data and expected ground cover, surface slope, and slope length. The interim cases utilize the default curve number assigned by the HELP model which is 87.9 and corresponds to "fair" ground cover. The percent runoff area used varies between 80. This is representative of the intermediate cover, which will be 12 inches of compacted soil with 60 percent or more vegetation coverage as specified in Section 3 of Appendix IIIH-E (allows a soil loss up to 50 ton/acre-yr for intermediate cover which equates to 60 percent vegetation coverage). The final case models a curve number of 82 and percent runoff area of 100, which corresponds to "good" ground cover. This is representative of the final cover, which will have a minimum 90 percent vegetation coverage as specified in Section 2.2 of Appendix IIIE.

HELP Model Summary Sheet - Pre-Subtitle D Area

Client: City of Del Rio
Project: Major Permit Amendment
Description: HELP Model Summary Sheet

Date: 1/31/2022
Job No: DELR1900546
By: T. Metaferia
Checked By: B. Hindman

		INTERIM (60 FT WASTE)	FINAL (60 FT WASTE)
GENERAL INFORMATION	Case No.	1	2
	No. of Years	23	30
	SCS Runoff Curve No.	87.9	82
	Model Area (acre)	1	1
	Runof Area (%)	80	100
	Maximum Leaf Area Index	2	4.5
	Evaporative Zone Depth (inch)	10	12
FINAL COVER	Thickness (in)		12
(TEXTURE = 10)	Porosity (vol/vol)		0.398
	Field Capacity (vol/vol)		0.244
	Wilting Point (vol/vol)		0.136
	Init. Moisture Content (vol/vol)		0.244
	Hyd. Conductivity (cm/s)		1.20E-04
DRAINAGE LAYER	Thickness (in)		18
(TEXTURE = 16)	Porosity (vol/vol)		0.427
	Field Capacity (vol/vol)		0.418
	Wilting Point (vol/vol)		0.367
	Init. Moisture Content (vol/vol)		0.427
	Hyd. Conductivity (cm/s)		1.00E-07
INTERMEDIATE COVER	Thickness (in)	12	12
(TEXTURE = 11)	Porosity (vol/vol)	0.464	0.464
	Field Capacity (vol/vol)	0.31	0.31
	Wilting Point (vol/vol)	0.187	0.187
	Init. Moisture Content (vol/vol)	0.31	0.31
	Hyd. Conductivity (cm/s)	6.40E-05	6.40E-05
WASTE	Thickness (in)	120	120
(TEXTURE =18)	Porosity (vol/vol)	0.671	0.671
	Field Capacity (vol/vol)	0.292	0.292
	Wilting Point (vol/vol)	0.077	0.077
	Init. Moisture Content (vol/vol)	0.272	0.272
	Hyd. Conductivity (cm/s)	1.00E-03	1.00E-03
PROTECTIVE COVER	Thickness (in)	24	24
(TEXTURE = 10)	Porosity (vol/vol)	0.398	0.398
	Field Capacity (vol/vol)	0.244	0.244
	Wilting Point (vol/vol)	0.136	0.136
	Init. Moisture Content (vol/vol)	0.244	0.244
	Hyd. Conductivity (cm/s)	1.20E-04	1.20E-04
LEACHATE COLLECTION LAYER	Thickness (in)	0.3	0.3
(TEXTURE = 44)	Porosity (vol/vol)	0.85	0.85
	Field Capacity (vol/vol)	0.01	0.01
	Wilting Point (vol/vol)	0.005	0.005
	Init. Moisture Content (vol/vol)	0.01	0.01
	Hyd. Conductivity (cm/s)	7.67	7.67
	Slope (%)	0.5	0.5
	Slope Length (ft)	500	500
FLEXIBLE MEMBRANE LINER	Thickness (in)	0.04	0.04
(TEXTURE = 35)	Hyd. Conductivity (cm/s)	4.00E-13	4.00E-13
	Pinhole Density (holes/acre)	1	1
	Install. Defects (holes/acre)	4	4
	Placement Quality	3	3
SUBGRADE SOIL LAYER	Thickness (in)	12	12
(TEXTURE = 11)	Porosity (vol/vol)	0.464	0.464
	Field Capacity (vol/vol)	0.31	0.31
	Wilting Point (vol/vol)	0.187	0.187
	Init. Moisture Content (vol/vol)	0.31	0.31
	Hyd. Conductivity (cm/s)	6.40E-05	6.40E-05
WASTE	Thickness (in)	600	600
(TEXTURE =18)	Porosity (vol/vol)	0.671	0.671
	Field Capacity (vol/vol)	0.292	0.292
	Wilting Point (vol/vol)	0.077	0.077
	Init. Moisture Content (vol/vol)	0.272	0.272
	Hyd. Conductivity (cm/s)	1.00E-03	1.00E-03
BARRIER SOIL LAYER	Thickness (in)	36	36
(TEXTURE = 29)	Porosity (vol/vol)	0.451	0.451
	Field Capacity (vol/vol)	0.419	0.419
	Wilting Point (vol/vol)	0.332	0.332
	Init. Moisture Content (vol/vol)	0.451	0.451
	Hyd. Conductivity (cm/s)	6.80E-07	6.80E-07
PRECIPITATION	Average Annual (in)	16.99	18.19
RUNOFF	Average Annual (in)	0.374	0.202
EVAPOTRANSPIRATION	Average Annual (in)	16.131	17.940
PRECOLATION	Average Annual (cf/yr)	0.000	0.000
THROUGH BOTTOM LINE	Average Annual (mm/yr)	0.000	0.000
HEAD OF LINER	Average Annual (in)	0.000	0.000
	Average Daily (in)	0.000	0.000

HELP Model Summary Sheet - Subtitle D

Client: City of Del Rio
Project: Major Permit Amendment
Description: HELP Model Summary Sheet

Date: 1/31/2022
Job No: DELR2000302
By: T. Metaferia
Checked By: B. Hindman

		INTERIM (50 FT WASTE)	CLOSED (80 FT WASTE)
GENERAL INFORMATION	Case No.	1	2
	No. of Years	23	30
	SCS Runoff Curve No.	87.9	82
	Model Area (acre)	1	1
	Runof Area (%)	80	100
	Maximum Leaf Area Index	2	4.5
	Evaporative Zone Depth (inch)	10	12
TOPSOIL LAYER	Thickness (in)		12
(TEXTURE = 10)	Porosity (vol/vol)		0.398
	Field Capacity (vol/vol)		0.244
	Wilting Point (vol/vol)		0.136
	Init. Moisture Content (vol/vol)		0.244
	Hyd. Conductivity (cm/s)		1.20E-04
INFILTRATION LAYER	Thickness (in)		18
(TEXTURE = 0)	Porosity (vol/vol)		0.427
	Field Capacity (vol/vol)		0.418
	Wilting Point (vol/vol)		0.367
	Init. Moisture Content (vol/vol)		0.427
	Hyd. Conductivity (cm/s)		1.00E-07
INTERMEDIATE COVER	Thickness (in)	12	12
(TEXTURE = 11)	Porosity (vol/vol)	0.464	0.464
	Field Capacity (vol/vol)	0.31	0.31
	Wilting Point (vol/vol)	0.187	0.187
	Init. Moisture Content (vol/vol)	0.31	0.31
	Hyd. Conductivity (cm/s)	6.40E-05	6.40E-05
WASTE TOP[1]	Thickness (in)	600	960
(TEXTURE = 0)	Porosity (vol/vol)	0.671	0.671
	Field Capacity (vol/vol)	0.292	0.292
	Wilting Point (vol/vol)	0.077	0.077
	Init. Moisture Content (vol/vol)	0.272	0.272
	Hyd. Conductivity (cm/s)	1.00E-03	1.00E-03
PROTECTIVE COVER	Thickness (in)	24	24
(TEXTURE = 10)	Porosity (vol/vol)	0.398	0.398
	Field Capacity (vol/vol)	0.244	0.244
	Wilting Point (vol/vol)	0.136	0.136
	Init. Moisture Content (vol/vol)	0.244	0.244
	Hyd. Conductivity (cm/s)	1.20E-04	1.20E+04
LEACHATE COLLECTION LAYER	Thickness (in)	0.30	0.30
(TEXTURE = 0)	Porosity (vol/vol)	0.85	0.85
	Field Capacity (vol/vol)	0.01	0.01
	Wilting Point (vol/vol)	0.005	0.005
	Init. Moisture Content (vol/vol)	0.01	0.01
	Hyd. Conductivity (cm/s)	2.05	2.05
	Slope (%)	2	2
	Slope Length (ft)	200	200
CLAY LINER	Thickness (in)	24	24
(TEXTURE = 0)	Porosity (vol/vol)	0.427	0.427
	Field Capacity (vol/vol)	0.418	0.418
	Wilting Point (vol/vol)	0.367	0.367
	Init. Moisture Content (vol/vol)	0.427	0.427
	Hyd. Conductivity (cm/s)	1.00E-07	1.00E-07
PRECIPITATION	Average Annual (in)	16.99	18.19
RUNOFF	Average Annual (in)	0.374	0.202
EVAPOTRANSPIRATION	Average Annual (in)	16.130	17.940
PRECOLATION	Average Annual (cf/yr)	24.2	0.000
THROUGH BOTTOM LINE	Average Annual (mm/yr)	0.170	0.000
HEAD OF LINER	Average Annual (in)	0.000	0.000
	Peak Daily (in)	0.016	0.000

1. The field capacity and porosity values for the waste layer were obtained from: Zornberg, Jorge G. et. al, Retention of Free Liquids in Landfills Undergoing Vertical Expansion. Journal of Geotechincal and Geoenvironmental Engineering, July 1999, pp. 583-594.

APPENDIX IIIK-C

MULTIMED MODEL

06/22/2022

MULTIMED MODEL OUTPUT

1

U. S. E N V I R O N M E N T A L P R O T E C T I O N A G E N C Y

E X P O S U R E A S S E S S M E N T

M U L T I M E D I A M O D E L

MULTIMED - (Version 2.00 Beta - October 1996)

1

Run options
--- -------

DEFAULT

DEL RIO LF VERTICAL EXPAN
Chemical simulated is DEFAULT CHEMICAL

Option Chosen Saturated zone model
Run was DETERMIN
Infiltration input by user
Run was steady-state
Reject runs if Y coordinate outside plume
Reject runs if Z coordinate outside plume
Gaussian source used in saturated zone model

1

1

CHEMICAL SPECIFIC VARIABLES

VARIABLE NAME	UNITS	DISTRIBUTION	PARAMETERS MEAN	STD DEV	LIMITS MIN	MAX
Solid phase decay coefficient	1/yr	CONSTANT	0.000	-999.	0.000	0.100E+11
Dissolved phase decay coefficient	1/yr	CONSTANT	0.000	-999.	0.000	0.100E+11
Overall chemical decay coefficient	1/yr	CONSTANT	0.000	-999.	0.000	0.100E+11
Acid catalyzed hydrolysis rate	l/M-yr	CONSTANT	0.000	-999.	0.000	-999.
Neutral hydrolysis rate constant	1/yr	CONSTANT	0.000	-999.	0.000	-999.
Base catalyzed hydrolysis rate	l/M-yr	CONSTANT	0.000	-999.	0.000	-999.

Reference temperature	C	CONSTANT	25.0	-999.	0.000	100.
Normalized distribution coefficient	ml/g	CONSTANT	0.000	-999.	0.000	-999.
Distribution coefficient	--	DERIVED	-999.	-999.	0.000	0.100E+11
Biodegradation coefficient (sat. zone)	1/yr	CONSTANT	0.000	-999.	0.000	-999.
Air diffusion coefficient	cm2/s	CONSTANT	0.000	-999.	0.000	10.0
Reference temperature for air diffusion	C	CONSTANT	0.000	-999.	0.000	100.
Molecular weight	g/M	CONSTANT	0.000	-999.	0.000	-999.
Mole fraction of solute	--	CONSTANT	0.000	-999.	0.100E-08	1.00
Vapor pressure of solute	mm Hg	CONSTANT	0.000	-999.	0.000	100.
Henry`s law constant	atm-m^3/M	CONSTANT	0.000	-999.	0.100E-09	1.00
Overall 1st order decay sat. zone	1/yr	DERIVED	0.000	0.000	0.000	1.00
Soil/Air Boundary Layer Thickness	cm	CONSTANT	-999.	-999.	0.000	-999.
Not currently used		CONSTANT	-999.	-999.	0.000	1.00

1

SOURCE SPECIFIC VARIABLES

VARIABLE NAME	UNITS	DISTRIBUTION	PARAMETERS MEAN	STD DEV	LIMITS MIN	MAX
Infiltration rate	m/yr	CONSTANT	0.170E-03	-999.	0.100E-09	0.100E+11
Area of waste disposal unit	m^2	CONSTANT	0.320E+06	-999.	0.100E-01	-999.
Duration of pulse	yr	CONSTANT	-999.	-999.	0.100E-08	-999.
Spread of contaminant source	m	DERIVED	-999.	-999.	0.100E-08	0.100E+11
Recharge rate	m/yr	CONSTANT	0.282E-01	-999.	0.000	0.100E+11
Source decay constant	1/yr	CONSTANT	0.000	-999.	0.000	-999.
Initial concentration at landfill	mg/l	CONSTANT	1.00	-999.	0.000	-999.
Length scale of facility	m	DERIVED	-999.	-999.	0.100E-08	0.100E+11
Width scale of facility	m	DERIVED	-999.	-999.	0.100E-08	0.100E+11
Near field dilution		DERIVED	1.00	0.000	0.000	1.00

1

AQUIFER SPECIFIC VARIABLES

VARIABLE NAME	UNITS	DISTRIBUTION	PARAMETERS MEAN	STD DEV	LIMITS MIN	MAX
Particle diameter	cm	CONSTANT	0.250E-01	-999.	0.100E-08	100.
Aquifer porosity	--	CONSTANT	0.100	-999.	0.100E-08	0.990

Bulk density	g/cc	CONSTANT	2.40	-999.	0.100E-01	5.00
Aquifer thickness	m	CONSTANT	91.4	-999.	0.100E-08	0.100E+06
Source thickness (mixing zone depth)	m	DERIVED	-999.	-999.	0.100E-08	0.100E+06
Conductivity (hydraulic)	m/yr	CONSTANT	100.	-999.	0.100E-06	0.100E+09
Gradient (hydraulic)		CONSTANT	0.110E-01	-999.	0.100E-07	-999.
Groundwater seepage velocity	m/yr	DERIVED	-999.	-999.	0.100E-09	0.100E+09
Retardation coefficient	--	DERIVED	-999.	-999.	1.00	0.100E+09
Longitudinal dispersivity	m	FUNCTION OF X	-999.	-999.	-999.	-999.
Transverse dispersivity	m	FUNCTION OF X	-999.	-999.	-999.	-999.
Vertical dispersivity	m	FUNCTION OF X	-999.	-999.	-999.	-999.
Temperature of aquifer	C	CONSTANT	25.0	-999.	0.000	100.
pH	--	CONSTANT	7.50	-999.	0.300	14.0
Organic carbon content (fraction)		CONSTANT	0.300E-02	-999.	0.100E-05	1.00
Well distance from site	m	CONSTANT	30.0	-999.	1.00	-999.
Angle off center	degree	CONSTANT	0.000	-999.	0.000	360.
Well vertical distance	m	CONSTANT	0.000	-999.	0.000	1.00

CONCENTRATION AFTER SATURATED ZONE MODEL 0.3443E-02

1

U. S. E N V I R O N M E N T A L P R O T E C T I O N A G E N C Y

E X P O S U R E A S S E S S M E N T

M U L T I M E D I A M O D E L

MULTIMED - (Version 2.00 Beta - October 1996)

1

Run options
--- -------

DEFAULT

DEL RIO LF VERTICAL EXPAN
Chemical simulated is DEFAULT CHEMICAL

Option Chosen Saturated zone model
Run was DETERMIN
Infiltration input by user
Run was steady-state
Reject runs if Y coordinate outside plume
Reject runs if Z coordinate outside plume
Gaussian source used in saturated zone model

1

1

CHEMICAL SPECIFIC VARIABLES

VARIABLE NAME	UNITS	DISTRIBUTION	PARAMETERS MEAN	STD DEV	LIMITS MIN	MAX
Solid phase decay coefficient	1/yr	CONSTANT	0.000	-999.	0.000	0.100E+11
Dissolved phase decay coefficient	1/yr	CONSTANT	0.000	-999.	0.000	0.100E+11
Overall chemical decay coefficient	1/yr	CONSTANT	0.000	-999.	0.000	0.100E+11
Acid catalyzed hydrolysis rate	l/M-yr	CONSTANT	0.000	-999.	0.000	-999.
Neutral hydrolysis rate constant	1/yr	CONSTANT	0.000	-999.	0.000	-999.
Base catalyzed hydrolysis rate	l/M-yr	CONSTANT	0.000	-999.	0.000	-999.

Reference temperature	C	CONSTANT	25.0	-999.	0.000	100.
Normalized distribution coefficient	ml/g	CONSTANT	0.000	-999.	0.000	-999.
Distribution coefficient	--	DERIVED	-999.	-999.	0.000	0.100E+11
Biodegradation coefficient (sat. zone)	1/yr	CONSTANT	0.000	-999.	0.000	-999.
Air diffusion coefficient	cm2/s	CONSTANT	0.000	-999.	0.000	10.0
Reference temperature for air diffusion	C	CONSTANT	0.000	-999.	0.000	100.
Molecular weight	g/M	CONSTANT	0.000	-999.	0.000	-999.
Mole fraction of solute	--	CONSTANT	0.000	-999.	0.100E-08	1.00
Vapor pressure of solute	mm Hg	CONSTANT	0.000	-999.	0.000	100.
Henry`s law constant	atm-m^3/M	CONSTANT	0.000	-999.	0.100E-09	1.00
Overall 1st order decay sat. zone	1/yr	DERIVED	0.000	0.000	0.000	1.00
Soil/Air Boundary Layer Thickness	cm	CONSTANT	-999.	-999.	0.000	-999.
Not currently used		CONSTANT	-999.	-999.	0.000	1.00

1

SOURCE SPECIFIC VARIABLES

VARIABLE NAME	UNITS	DISTRIBUTION	PARAMETERS MEAN	STD DEV	LIMITS MIN	MAX
Infiltration rate	m/yr	CONSTANT	0.170E-03	-999.	0.100E-09	0.100E+11
Area of waste disposal unit	m^2	CONSTANT	0.320E+06	-999.	0.100E-01	-999.
Duration of pulse	yr	CONSTANT	-999.	-999.	0.100E-08	-999.
Spread of contaminant source	m	DERIVED	-999.	-999.	0.100E-08	0.100E+11
Recharge rate	m/yr	CONSTANT	0.282E-01	-999.	0.000	0.100E+11
Source decay constant	1/yr	CONSTANT	0.000	-999.	0.000	-999.
Initial concentration at landfill	mg/l	CONSTANT	1.00	-999.	0.000	-999.
Length scale of facility	m	DERIVED	-999.	-999.	0.100E-08	0.100E+11
Width scale of facility	m	DERIVED	-999.	-999.	0.100E-08	0.100E+11
Near field dilution		DERIVED	1.00	0.000	0.000	1.00

1

AQUIFER SPECIFIC VARIABLES

VARIABLE NAME	UNITS	DISTRIBUTION	PARAMETERS MEAN	STD DEV	LIMITS MIN	MAX
Particle diameter	cm	CONSTANT	0.250E-01	-999.	0.100E-08	100.
Aquifer porosity	--	CONSTANT	0.100	-999.	0.100E-08	0.990

Bulk density	g/cc	CONSTANT	2.40	-999.	0.100E-01	5.00
Aquifer thickness	m	CONSTANT	91.4	-999.	0.100E-08	0.100E+06
Source thickness (mixing zone depth)	m	DERIVED	-999.	-999.	0.100E-08	0.100E+06
Conductivity (hydraulic)	m/yr	CONSTANT	50.0	-999.	0.100E-06	0.100E+09
Gradient (hydraulic)		CONSTANT	0.110E-01	-999.	0.100E-07	-999.
Groundwater seepage velocity	m/yr	DERIVED	-999.	-999.	0.100E-09	0.100E+09
Retardation coefficient	--	DERIVED	-999.	-999.	1.00	0.100E+09
Longitudinal dispersivity	m	FUNCTION OF X	-999.	-999.	-999.	-999.
Transverse dispersivity	m	FUNCTION OF X	-999.	-999.	-999.	-999.
Vertical dispersivity	m	FUNCTION OF X	-999.	-999.	-999.	-999.
Temperature of aquifer	C	CONSTANT	25.0	-999.	0.000	100.
pH	--	CONSTANT	7.50	-999.	0.300	14.0
Organic carbon content (fraction)		CONSTANT	0.300E-02	-999.	0.100E-05	1.00
Well distance from site	m	CONSTANT	30.0	-999.	1.00	-999.
Angle off center	degree	CONSTANT	0.000	-999.	0.000	360.
Well vertical distance	m	CONSTANT	0.000	-999.	0.000	1.00

CONCENTRATION AFTER SATURATED ZONE MODEL 0.6819E-02

1

U. S. E N V I R O N M E N T A L P R O T E C T I O N A G E N C Y

E X P O S U R E A S S E S S M E N T

M U L T I M E D I A M O D E L

MULTIMED - (Version 2.00 Beta - October 1996)

1

Run options
--- -------

DEFAULT

DEL RIO LF VERTICAL EXPAN
Chemical simulated is DEFAULT CHEMICAL

Option Chosen Saturated zone model
Run was DETERMIN
Infiltration input by user
Run was steady-state
Reject runs if Y coordinate outside plume
Reject runs if Z coordinate outside plume
Gaussian source used in saturated zone model

1

1

CHEMICAL SPECIFIC VARIABLES

VARIABLE NAME	UNITS	DISTRIBUTION	PARAMETERS MEAN	STD DEV	LIMITS MIN	MAX
Solid phase decay coefficient	1/yr	CONSTANT	0.000	-999.	0.000	0.100E+11
Dissolved phase decay coefficient	1/yr	CONSTANT	0.000	-999.	0.000	0.100E+11
Overall chemical decay coefficient	1/yr	CONSTANT	0.000	-999.	0.000	0.100E+11
Acid catalyzed hydrolysis rate	l/M-yr	CONSTANT	0.000	-999.	0.000	-999.
Neutral hydrolysis rate constant	1/yr	CONSTANT	0.000	-999.	0.000	-999.
Base catalyzed hydrolysis rate	l/M-yr	CONSTANT	0.000	-999.	0.000	-999.

Reference temperature	C	CONSTANT	25.0	-999.	0.000	100.
Normalized distribution coefficient	ml/g	CONSTANT	0.000	-999.	0.000	-999.
Distribution coefficient	--	DERIVED	-999.	-999.	0.000	0.100E+11
Biodegradation coefficient (sat. zone)	1/yr	CONSTANT	0.000	-999.	0.000	-999.
Air diffusion coefficient	cm2/s	CONSTANT	0.000	-999.	0.000	10.0
Reference temperature for air diffusion	C	CONSTANT	0.000	-999.	0.000	100.
Molecular weight	g/M	CONSTANT	0.000	-999.	0.000	-999.
Mole fraction of solute	--	CONSTANT	0.000	-999.	0.100E-08	1.00
Vapor pressure of solute	mm Hg	CONSTANT	0.000	-999.	0.000	100.
Henry`s law constant	atm-m^3/M	CONSTANT	0.000	-999.	0.100E-09	1.00
Overall 1st order decay sat. zone	1/yr	DERIVED	0.000	0.000	0.000	1.00
Soil/Air Boundary Layer Thickness	cm	CONSTANT	-999.	-999.	0.000	-999.
Not currently used		CONSTANT	-999.	-999.	0.000	1.00

1

SOURCE SPECIFIC VARIABLES

VARIABLE NAME	UNITS	DISTRIBUTION	PARAMETERS MEAN	STD DEV	LIMITS MIN	MAX
Infiltration rate	m/yr	CONSTANT	0.170E-03	-999.	0.100E-09	0.100E+11
Area of waste disposal unit	m^2	CONSTANT	0.320E+06	-999.	0.100E-01	-999.
Duration of pulse	yr	CONSTANT	-999.	-999.	0.100E-08	-999.
Spread of contaminant source	m	DERIVED	-999.	-999.	0.100E-08	0.100E+11
Recharge rate	m/yr	CONSTANT	0.282E-01	-999.	0.000	0.100E+11
Source decay constant	1/yr	CONSTANT	0.000	-999.	0.000	-999.
Initial concentration at landfill	mg/l	CONSTANT	1.00	-999.	0.000	-999.
Length scale of facility	m	DERIVED	-999.	-999.	0.100E-08	0.100E+11
Width scale of facility	m	DERIVED	-999.	-999.	0.100E-08	0.100E+11
Near field dilution		DERIVED	1.00	0.000	0.000	1.00

1

AQUIFER SPECIFIC VARIABLES

VARIABLE NAME	UNITS	DISTRIBUTION	PARAMETERS MEAN	STD DEV	LIMITS MIN	MAX
Particle diameter	cm	CONSTANT	0.250E-01	-999.	0.100E-08	100.
Aquifer porosity	--	CONSTANT	0.100	-999.	0.100E-08	0.990

Bulk density	g/cc	CONSTANT	2.40	-999.	0.100E-01	5.00
Aquifer thickness	m	CONSTANT	91.4	-999.	0.100E-08	0.100E+06
Source thickness (mixing zone depth)	m	DERIVED	-999.	-999.	0.100E-08	0.100E+06
Conductivity (hydraulic)	m/yr	CONSTANT	150.	-999.	0.100E-06	0.100E+09
Gradient (hydraulic)		CONSTANT	0.110E-01	-999.	0.100E-07	-999.
Groundwater seepage velocity	m/yr	DERIVED	-999.	-999.	0.100E-09	0.100E+09
Retardation coefficient	--	DERIVED	-999.	-999.	1.00	0.100E+09
Longitudinal dispersivity	m	FUNCTION OF X	-999.	-999.	-999.	-999.
Transverse dispersivity	m	FUNCTION OF X	-999.	-999.	-999.	-999.
Vertical dispersivity	m	FUNCTION OF X	-999.	-999.	-999.	-999.
Temperature of aquifer	C	CONSTANT	25.0	-999.	0.000	100.
pH	--	CONSTANT	7.50	-999.	0.300	14.0
Organic carbon content (fraction)		CONSTANT	0.300E-02	-999.	0.100E-05	1.00
Well distance from site	m	CONSTANT	30.0	-999.	1.00	-999.
Angle off center	degree	CONSTANT	0.000	-999.	0.000	360.
Well vertical distance	m	CONSTANT	0.000	-999.	0.000	1.00

CONCENTRATION AFTER SATURATED ZONE MODEL 0.2303E-02

1

U. S. E N V I R O N M E N T A L P R O T E C T I O N A G E N C Y

E X P O S U R E A S S E S S M E N T

M U L T I M E D I A M O D E L

MULTIMED - (Version 2.00 Beta - October 1996)

1

Run options
--- -------

DEFAULT

DEL RIO LF VERTICAL EXPAN
Chemical simulated is DEFAULT CHEMICAL

Option Chosen Saturated zone model
Run was DETERMIN
Infiltration input by user
Run was steady-state
Reject runs if Y coordinate outside plume
Reject runs if Z coordinate outside plume
Gaussian source used in saturated zone model

1

1

CHEMICAL SPECIFIC VARIABLES

VARIABLE NAME	UNITS	DISTRIBUTION	PARAMETERS MEAN	STD DEV	LIMITS MIN	MAX
Solid phase decay coefficient	1/yr	CONSTANT	0.000	-999.	0.000	0.100E+11
Dissolved phase decay coefficient	1/yr	CONSTANT	0.000	-999.	0.000	0.100E+11
Overall chemical decay coefficient	1/yr	CONSTANT	0.000	-999.	0.000	0.100E+11
Acid catalyzed hydrolysis rate	l/M-yr	CONSTANT	0.000	-999.	0.000	-999.
Neutral hydrolysis rate constant	1/yr	CONSTANT	0.000	-999.	0.000	-999.
Base catalyzed hydrolysis rate	l/M-yr	CONSTANT	0.000	-999.	0.000	-999.

Reference temperature	C	CONSTANT	25.0	-999.	0.000	100.
Normalized distribution coefficient	ml/g	CONSTANT	0.000	-999.	0.000	-999.
Distribution coefficient	--	DERIVED	-999.	-999.	0.000	0.100E+11
Biodegradation coefficient (sat. zone)	1/yr	CONSTANT	0.000	-999.	0.000	-999.
Air diffusion coefficient	cm2/s	CONSTANT	0.000	-999.	0.000	10.0
Reference temperature for air diffusion	C	CONSTANT	0.000	-999.	0.000	100.
Molecular weight	g/M	CONSTANT	0.000	-999.	0.000	-999.
Mole fraction of solute	--	CONSTANT	0.000	-999.	0.100E-08	1.00
Vapor pressure of solute	mm Hg	CONSTANT	0.000	-999.	0.000	100.
Henry`s law constant	atm-m^3/M	CONSTANT	0.000	-999.	0.100E-09	1.00
Overall 1st order decay sat. zone	1/yr	DERIVED	0.000	0.000	0.000	1.00
Soil/Air Boundary Layer Thickness	cm	CONSTANT	-999.	-999.	0.000	-999.
Not currently used		CONSTANT	-999.	-999.	0.000	1.00

1

SOURCE SPECIFIC VARIABLES

VARIABLE NAME	UNITS	DISTRIBUTION	PARAMETERS MEAN	STD DEV	LIMITS MIN	MAX
Infiltration rate	m/yr	CONSTANT	0.170E-03	-999.	0.100E-09	0.100E+11
Area of waste disposal unit	m^2	CONSTANT	0.320E+06	-999.	0.100E-01	-999.
Duration of pulse	yr	CONSTANT	-999.	-999.	0.100E-08	-999.
Spread of contaminant source	m	DERIVED	-999.	-999.	0.100E-08	0.100E+11
Recharge rate	m/yr	CONSTANT	0.282E-01	-999.	0.000	0.100E+11
Source decay constant	1/yr	CONSTANT	0.000	-999.	0.000	-999.
Initial concentration at landfill	mg/l	CONSTANT	1.00	-999.	0.000	-999.
Length scale of facility	m	DERIVED	-999.	-999.	0.100E-08	0.100E+11
Width scale of facility	m	DERIVED	-999.	-999.	0.100E-08	0.100E+11
Near field dilution		DERIVED	1.00	0.000	0.000	1.00

1

AQUIFER SPECIFIC VARIABLES

VARIABLE NAME	UNITS	DISTRIBUTION	PARAMETERS MEAN	STD DEV	LIMITS MIN	MAX
Particle diameter	cm	CONSTANT	0.250E-01	-999.	0.100E-08	100.
Aquifer porosity	--	CONSTANT	0.100	-999.	0.100E-08	0.990

Bulk density	g/cc	CONSTANT	2.40	-999.	0.100E-01	5.00
Aquifer thickness	m	CONSTANT	50.0	-999.	0.100E-08	0.100E+06
Source thickness (mixing zone depth)	m	DERIVED	-999.	-999.	0.100E-08	0.100E+06
Conductivity (hydraulic)	m/yr	CONSTANT	100.	-999.	0.100E-06	0.100E+09
Gradient (hydraulic)		CONSTANT	0.110E-01	-999.	0.100E-07	-999.
Groundwater seepage velocity	m/yr	DERIVED	-999.	-999.	0.100E-09	0.100E+09
Retardation coefficient	--	DERIVED	-999.	-999.	1.00	0.100E+09
Longitudinal dispersivity	m	FUNCTION OF X	-999.	-999.	-999.	-999.
Transverse dispersivity	m	FUNCTION OF X	-999.	-999.	-999.	-999.
Vertical dispersivity	m	FUNCTION OF X	-999.	-999.	-999.	-999.
Temperature of aquifer	C	CONSTANT	25.0	-999.	0.000	100.
pH	--	CONSTANT	7.50	-999.	0.300	14.0
Organic carbon content (fraction)		CONSTANT	0.300E-02	-999.	0.100E-05	1.00
Well distance from site	m	CONSTANT	30.0	-999.	1.00	-999.
Angle off center	degree	CONSTANT	0.000	-999.	0.000	360.
Well vertical distance	m	CONSTANT	0.000	-999.	0.000	1.00

CONCENTRATION AFTER SATURATED ZONE MODEL 0.4108E-02

1

U. S. E N V I R O N M E N T A L P R O T E C T I O N A G E N C Y

E X P O S U R E A S S E S S M E N T

M U L T I M E D I A M O D E L

MULTIMED - (Version 2.00 Beta - October 1996)

1

Run options
--- -------

DEFAULT

DEL RIO LF VERTICAL EXPAN
Chemical simulated is DEFAULT CHEMICAL

Option Chosen Saturated zone model
Run was DETERMIN
Infiltration input by user
Run was steady-state
Reject runs if Y coordinate outside plume
Reject runs if Z coordinate outside plume
Gaussian source used in saturated zone model

1

1

CHEMICAL SPECIFIC VARIABLES

VARIABLE NAME	UNITS	DISTRIBUTION	PARAMETERS MEAN	STD DEV	LIMITS MIN	MAX
Solid phase decay coefficient	1/yr	CONSTANT	0.000	-999.	0.000	0.100E+11
Dissolved phase decay coefficient	1/yr	CONSTANT	0.000	-999.	0.000	0.100E+11
Overall chemical decay coefficient	1/yr	CONSTANT	0.000	-999.	0.000	0.100E+11
Acid catalyzed hydrolysis rate	l/M-yr	CONSTANT	0.000	-999.	0.000	-999.
Neutral hydrolysis rate constant	1/yr	CONSTANT	0.000	-999.	0.000	-999.
Base catalyzed hydrolysis rate	l/M-yr	CONSTANT	0.000	-999.	0.000	-999.

Reference temperature	C	CONSTANT	25.0	-999.	0.000	100.
Normalized distribution coefficient	ml/g	CONSTANT	0.000	-999.	0.000	-999.
Distribution coefficient	--	DERIVED	-999.	-999.	0.000	0.100E+11
Biodegradation coefficient (sat. zone)	1/yr	CONSTANT	0.000	-999.	0.000	-999.
Air diffusion coefficient	cm2/s	CONSTANT	0.000	-999.	0.000	10.0
Reference temperature for air diffusion	C	CONSTANT	0.000	-999.	0.000	100.
Molecular weight	g/M	CONSTANT	0.000	-999.	0.000	-999.
Mole fraction of solute	--	CONSTANT	0.000	-999.	0.100E-08	1.00
Vapor pressure of solute	mm Hg	CONSTANT	0.000	-999.	0.000	100.
Henry`s law constant	atm-m^3/M	CONSTANT	0.000	-999.	0.100E-09	1.00
Overall 1st order decay sat. zone	1/yr	DERIVED	0.000	0.000	0.000	1.00
Soil/Air Boundary Layer Thickness	cm	CONSTANT	-999.	-999.	0.000	-999.
Not currently used		CONSTANT	-999.	-999.	0.000	1.00

1

SOURCE SPECIFIC VARIABLES

VARIABLE NAME	UNITS	DISTRIBUTION	PARAMETERS MEAN	STD DEV	LIMITS MIN	MAX
Infiltration rate	m/yr	CONSTANT	0.170E-03	-999.	0.100E-09	0.100E+11
Area of waste disposal unit	m^2	CONSTANT	0.320E+06	-999.	0.100E-01	-999.
Duration of pulse	yr	CONSTANT	-999.	-999.	0.100E-08	-999.
Spread of contaminant source	m	DERIVED	-999.	-999.	0.100E-08	0.100E+11
Recharge rate	m/yr	CONSTANT	0.282E-01	-999.	0.000	0.100E+11
Source decay constant	1/yr	CONSTANT	0.000	-999.	0.000	-999.
Initial concentration at landfill	mg/l	CONSTANT	1.00	-999.	0.000	-999.
Length scale of facility	m	DERIVED	-999.	-999.	0.100E-08	0.100E+11
Width scale of facility	m	DERIVED	-999.	-999.	0.100E-08	0.100E+11
Near field dilution		DERIVED	1.00	0.000	0.000	1.00

1

AQUIFER SPECIFIC VARIABLES

VARIABLE NAME	UNITS	DISTRIBUTION	PARAMETERS MEAN	STD DEV	LIMITS MIN	MAX
Particle diameter	cm	CONSTANT	0.250E-01	-999.	0.100E-08	100.
Aquifer porosity	--	CONSTANT	0.100	-999.	0.100E-08	0.990

Bulk density	g/cc	CONSTANT	2.40	-999.	0.100E-01	5.00
Aquifer thickness	m	CONSTANT	125.	-999.	0.100E-08	0.100E+06
Source thickness (mixing zone depth)	m	DERIVED	-999.	-999.	0.100E-08	0.100E+06
Conductivity (hydraulic)	m/yr	CONSTANT	100.	-999.	0.100E-06	0.100E+09
Gradient (hydraulic)		CONSTANT	0.110E-01	-999.	0.100E-07	-999.
Groundwater seepage velocity	m/yr	DERIVED	-999.	-999.	0.100E-09	0.100E+09
Retardation coefficient	--	DERIVED	-999.	-999.	1.00	0.100E+09
Longitudinal dispersivity	m	FUNCTION OF X	-999.	-999.	-999.	-999.
Transverse dispersivity	m	FUNCTION OF X	-999.	-999.	-999.	-999.
Vertical dispersivity	m	FUNCTION OF X	-999.	-999.	-999.	-999.
Temperature of aquifer	C	CONSTANT	25.0	-999.	0.000	100.
pH	--	CONSTANT	7.50	-999.	0.300	14.0
Organic carbon content (fraction)		CONSTANT	0.300E-02	-999.	0.100E-05	1.00
Well distance from site	m	CONSTANT	30.0	-999.	1.00	-999.
Angle off center	degree	CONSTANT	0.000	-999.	0.000	360.
Well vertical distance	m	CONSTANT	0.000	-999.	0.000	1.00

CONCENTRATION AFTER SATURATED ZONE MODEL 0.3451E-02

1

U. S. E N V I R O N M E N T A L P R O T E C T I O N A G E N C Y

E X P O S U R E A S S E S S M E N T

M U L T I M E D I A M O D E L

MULTIMED - (Version 2.00 Beta - October 1996)

1

Run options
--- -------

DEFAULT

DEL RIO LF VERTICAL EXPAN
Chemical simulated is DEFAULT CHEMICAL

Option Chosen Saturated zone model
Run was DETERMIN
Infiltration input by user
Run was steady-state
Reject runs if Y coordinate outside plume
Reject runs if Z coordinate outside plume
Gaussian source used in saturated zone model

1

1

CHEMICAL SPECIFIC VARIABLES

VARIABLE NAME	UNITS	DISTRIBUTION	PARAMETERS MEAN	STD DEV	LIMITS MIN	MAX
Solid phase decay coefficient	1/yr	CONSTANT	0.000	-999.	0.000	0.100E+11
Dissolved phase decay coefficient	1/yr	CONSTANT	0.000	-999.	0.000	0.100E+11
Overall chemical decay coefficient	1/yr	CONSTANT	0.000	-999.	0.000	0.100E+11
Acid catalyzed hydrolysis rate	l/M-yr	CONSTANT	0.000	-999.	0.000	-999.
Neutral hydrolysis rate constant	1/yr	CONSTANT	0.000	-999.	0.000	-999.
Base catalyzed hydrolysis rate	l/M-yr	CONSTANT	0.000	-999.	0.000	-999.

Reference temperature	C	CONSTANT	25.0	-999.	0.000	100.
Normalized distribution coefficient	ml/g	CONSTANT	0.000	-999.	0.000	-999.
Distribution coefficient	--	DERIVED	-999.	-999.	0.000	0.100E+11
Biodegradation coefficient (sat. zone)	1/yr	CONSTANT	0.000	-999.	0.000	-999.
Air diffusion coefficient	cm2/s	CONSTANT	0.000	-999.	0.000	10.0
Reference temperature for air diffusion	C	CONSTANT	0.000	-999.	0.000	100.
Molecular weight	g/M	CONSTANT	0.000	-999.	0.000	-999.
Mole fraction of solute	--	CONSTANT	0.000	-999.	0.100E-08	1.00
Vapor pressure of solute	mm Hg	CONSTANT	0.000	-999.	0.000	100.
Henry`s law constant	atm-m^3/M	CONSTANT	0.000	-999.	0.100E-09	1.00
Overall 1st order decay sat. zone	1/yr	DERIVED	0.000	0.000	0.000	1.00
Soil/Air Boundary Layer Thickness	cm	CONSTANT	-999.	-999.	0.000	-999.
Not currently used		CONSTANT	-999.	-999.	0.000	1.00

1

SOURCE SPECIFIC VARIABLES

VARIABLE NAME	UNITS	DISTRIBUTION	PARAMETERS MEAN	STD DEV	LIMITS MIN	MAX
Infiltration rate	m/yr	CONSTANT	0.170E-03	-999.	0.100E-09	0.100E+11
Area of waste disposal unit	m^2	CONSTANT	0.320E+06	-999.	0.100E-01	-999.
Duration of pulse	yr	CONSTANT	-999.	-999.	0.100E-08	-999.
Spread of contaminant source	m	DERIVED	-999.	-999.	0.100E-08	0.100E+11
Recharge rate	m/yr	CONSTANT	0.282E-01	-999.	0.000	0.100E+11
Source decay constant	1/yr	CONSTANT	0.000	-999.	0.000	-999.
Initial concentration at landfill	mg/l	CONSTANT	1.00	-999.	0.000	-999.
Length scale of facility	m	DERIVED	-999.	-999.	0.100E-08	0.100E+11
Width scale of facility	m	DERIVED	-999.	-999.	0.100E-08	0.100E+11
Near field dilution		DERIVED	1.00	0.000	0.000	1.00

1

AQUIFER SPECIFIC VARIABLES

VARIABLE NAME	UNITS	DISTRIBUTION	PARAMETERS MEAN	STD DEV	LIMITS MIN	MAX
Particle diameter	cm	CONSTANT	0.250E-01	-999.	0.100E-08	100.
Aquifer porosity	--	CONSTANT	0.500E-01	-999.	0.100E-08	0.990

Bulk density	g/cc	CONSTANT	2.40	-999.	0.100E-01	5.00
Aquifer thickness	m	CONSTANT	91.4	-999.	0.100E-08	0.100E+06
Source thickness (mixing zone depth)	m	DERIVED	-999.	-999.	0.100E-08	0.100E+06
Conductivity (hydraulic)	m/yr	CONSTANT	100.	-999.	0.100E-06	0.100E+09
Gradient (hydraulic)		CONSTANT	0.110E-01	-999.	0.100E-07	-999.
Groundwater seepage velocity	m/yr	DERIVED	-999.	-999.	0.100E-09	0.100E+09
Retardation coefficient	--	DERIVED	-999.	-999.	1.00	0.100E+09
Longitudinal dispersivity	m	FUNCTION OF X	-999.	-999.	-999.	-999.
Transverse dispersivity	m	FUNCTION OF X	-999.	-999.	-999.	-999.
Vertical dispersivity	m	FUNCTION OF X	-999.	-999.	-999.	-999.
Temperature of aquifer	C	CONSTANT	25.0	-999.	0.000	100.
pH	--	CONSTANT	7.50	-999.	0.300	14.0
Organic carbon content (fraction)		CONSTANT	0.300E-02	-999.	0.100E-05	1.00
Well distance from site	m	CONSTANT	30.0	-999.	1.00	-999.
Angle off center	degree	CONSTANT	0.000	-999.	0.000	360.
Well vertical distance	m	CONSTANT	0.000	-999.	0.000	1.00

CONCENTRATION AFTER SATURATED ZONE MODEL 0.3443E-02

1

U. S. E N V I R O N M E N T A L P R O T E C T I O N A G E N C Y

E X P O S U R E A S S E S S M E N T

M U L T I M E D I A M O D E L

MULTIMED - (Version 2.00 Beta - October 1996)

1

Run options
--- -------

DEFAULT

DEL RIO LF VERTICAL EXPAN
Chemical simulated is DEFAULT CHEMICAL

Option Chosen Saturated zone model
Run was DETERMIN
Infiltration input by user
Run was steady-state
Reject runs if Y coordinate outside plume
Reject runs if Z coordinate outside plume
Gaussian source used in saturated zone model

1

1

CHEMICAL SPECIFIC VARIABLES

VARIABLE NAME	UNITS	DISTRIBUTION	PARAMETERS MEAN	STD DEV	LIMITS MIN	MAX
Solid phase decay coefficient	1/yr	CONSTANT	0.000	-999.	0.000	0.100E+11
Dissolved phase decay coefficient	1/yr	CONSTANT	0.000	-999.	0.000	0.100E+11
Overall chemical decay coefficient	1/yr	CONSTANT	0.000	-999.	0.000	0.100E+11
Acid catalyzed hydrolysis rate	l/M-yr	CONSTANT	0.000	-999.	0.000	-999.
Neutral hydrolysis rate constant	1/yr	CONSTANT	0.000	-999.	0.000	-999.
Base catalyzed hydrolysis rate	l/M-yr	CONSTANT	0.000	-999.	0.000	-999.

Reference temperature	C	CONSTANT	25.0	-999.	0.000	100.
Normalized distribution coefficient	ml/g	CONSTANT	0.000	-999.	0.000	-999.
Distribution coefficient	--	DERIVED	-999.	-999.	0.000	0.100E+11
Biodegradation coefficient (sat. zone)	1/yr	CONSTANT	0.000	-999.	0.000	-999.
Air diffusion coefficient	cm2/s	CONSTANT	0.000	-999.	0.000	10.0
Reference temperature for air diffusion	C	CONSTANT	0.000	-999.	0.000	100.
Molecular weight	g/M	CONSTANT	0.000	-999.	0.000	-999.
Mole fraction of solute	--	CONSTANT	0.000	-999.	0.100E-08	1.00
Vapor pressure of solute	mm Hg	CONSTANT	0.000	-999.	0.000	100.
Henry`s law constant	atm-m^3/M	CONSTANT	0.000	-999.	0.100E-09	1.00
Overall 1st order decay sat. zone	1/yr	DERIVED	0.000	0.000	0.000	1.00
Soil/Air Boundary Layer Thickness	cm	CONSTANT	-999.	-999.	0.000	-999.
Not currently used		CONSTANT	-999.	-999.	0.000	1.00

1

SOURCE SPECIFIC VARIABLES

VARIABLE NAME	UNITS	DISTRIBUTION	PARAMETERS MEAN	STD DEV	LIMITS MIN	MAX
Infiltration rate	m/yr	CONSTANT	0.170E-03	-999.	0.100E-09	0.100E+11
Area of waste disposal unit	m^2	CONSTANT	0.320E+06	-999.	0.100E-01	-999.
Duration of pulse	yr	CONSTANT	-999.	-999.	0.100E-08	-999.
Spread of contaminant source	m	DERIVED	-999.	-999.	0.100E-08	0.100E+11
Recharge rate	m/yr	CONSTANT	0.282E-01	-999.	0.000	0.100E+11
Source decay constant	1/yr	CONSTANT	0.000	-999.	0.000	-999.
Initial concentration at landfill	mg/l	CONSTANT	1.00	-999.	0.000	-999.
Length scale of facility	m	DERIVED	-999.	-999.	0.100E-08	0.100E+11
Width scale of facility	m	DERIVED	-999.	-999.	0.100E-08	0.100E+11
Near field dilution		DERIVED	1.00	0.000	0.000	1.00

1

AQUIFER SPECIFIC VARIABLES

VARIABLE NAME	UNITS	DISTRIBUTION	PARAMETERS MEAN	STD DEV	LIMITS MIN	MAX
Particle diameter	cm	CONSTANT	0.250E-01	-999.	0.100E-08	100.
Aquifer porosity	--	CONSTANT	0.506	-999.	0.100E-08	0.990

Bulk density	g/cc	CONSTANT	2.40	-999.	0.100E-01	5.00
Aquifer thickness	m	CONSTANT	91.4	-999.	0.100E-08	0.100E+06
Source thickness (mixing zone depth)	m	DERIVED	-999.	-999.	0.100E-08	0.100E+06
Conductivity (hydraulic)	m/yr	CONSTANT	100.	-999.	0.100E-06	0.100E+09
Gradient (hydraulic)		CONSTANT	0.110E-01	-999.	0.100E-07	-999.
Groundwater seepage velocity	m/yr	DERIVED	-999.	-999.	0.100E-09	0.100E+09
Retardation coefficient	--	DERIVED	-999.	-999.	1.00	0.100E+09
Longitudinal dispersivity	m	FUNCTION OF X	-999.	-999.	-999.	-999.
Transverse dispersivity	m	FUNCTION OF X	-999.	-999.	-999.	-999.
Vertical dispersivity	m	FUNCTION OF X	-999.	-999.	-999.	-999.
Temperature of aquifer	C	CONSTANT	25.0	-999.	0.000	100.
pH	--	CONSTANT	7.50	-999.	0.300	14.0
Organic carbon content (fraction)		CONSTANT	0.300E-02	-999.	0.100E-05	1.00
Well distance from site	m	CONSTANT	30.0	-999.	1.00	-999.
Angle off center	degree	CONSTANT	0.000	-999.	0.000	360.
Well vertical distance	m	CONSTANT	0.000	-999.	0.000	1.00

CONCENTRATION AFTER SATURATED ZONE MODEL 0.3443E-02

1

U. S. E N V I R O N M E N T A L P R O T E C T I O N A G E N C Y

E X P O S U R E A S S E S S M E N T

M U L T I M E D I A M O D E L

MULTIMED - (Version 2.00 Beta - October 1996)

1

Run options
--- -------

DEFAULT

DEL RIO LF VERTICAL EXPAN
Chemical simulated is DEFAULT CHEMICAL

Option Chosen Saturated zone model
Run was DETERMIN
Infiltration input by user
Run was steady-state
Reject runs if Y coordinate outside plume
Reject runs if Z coordinate outside plume
Gaussian source used in saturated zone model

1

1

CHEMICAL SPECIFIC VARIABLES

VARIABLE NAME	UNITS	DISTRIBUTION	PARAMETERS MEAN	STD DEV	LIMITS MIN	MAX
Solid phase decay coefficient	1/yr	CONSTANT	0.000	-999.	0.000	0.100E+11
Dissolved phase decay coefficient	1/yr	CONSTANT	0.000	-999.	0.000	0.100E+11
Overall chemical decay coefficient	1/yr	CONSTANT	0.000	-999.	0.000	0.100E+11
Acid catalyzed hydrolysis rate	l/M-yr	CONSTANT	0.000	-999.	0.000	-999.
Neutral hydrolysis rate constant	1/yr	CONSTANT	0.000	-999.	0.000	-999.
Base catalyzed hydrolysis rate	l/M-yr	CONSTANT	0.000	-999.	0.000	-999.

Reference temperature	C	CONSTANT	25.0	-999.	0.000	100.
Normalized distribution coefficient	ml/g	CONSTANT	0.000	-999.	0.000	-999.
Distribution coefficient	--	DERIVED	-999.	-999.	0.000	0.100E+11
Biodegradation coefficient (sat. zone)	1/yr	CONSTANT	0.000	-999.	0.000	-999.
Air diffusion coefficient	cm2/s	CONSTANT	0.000	-999.	0.000	10.0
Reference temperature for air diffusion	C	CONSTANT	0.000	-999.	0.000	100.
Molecular weight	g/M	CONSTANT	0.000	-999.	0.000	-999.
Mole fraction of solute	--	CONSTANT	0.000	-999.	0.100E-08	1.00
Vapor pressure of solute	mm Hg	CONSTANT	0.000	-999.	0.000	100.
Henry`s law constant	atm-m^3/M	CONSTANT	0.000	-999.	0.100E-09	1.00
Overall 1st order decay sat. zone	1/yr	DERIVED	0.000	0.000	0.000	1.00
Soil/Air Boundary Layer Thickness	cm	CONSTANT	-999.	-999.	0.000	-999.
Not currently used		CONSTANT	-999.	-999.	0.000	1.00

1

SOURCE SPECIFIC VARIABLES

VARIABLE NAME	UNITS	DISTRIBUTION	PARAMETERS MEAN	STD DEV	LIMITS MIN	MAX
Infiltration rate	m/yr	CONSTANT	0.170E-03	-999.	0.100E-09	0.100E+11
Area of waste disposal unit	m^2	CONSTANT	0.320E+06	-999.	0.100E-01	-999.
Duration of pulse	yr	CONSTANT	-999.	-999.	0.100E-08	-999.
Spread of contaminant source	m	DERIVED	-999.	-999.	0.100E-08	0.100E+11
Recharge rate	m/yr	CONSTANT	0.282E-01	-999.	0.000	0.100E+11
Source decay constant	1/yr	CONSTANT	0.000	-999.	0.000	-999.
Initial concentration at landfill	mg/l	CONSTANT	1.00	-999.	0.000	-999.
Length scale of facility	m	DERIVED	-999.	-999.	0.100E-08	0.100E+11
Width scale of facility	m	DERIVED	-999.	-999.	0.100E-08	0.100E+11
Near field dilution		DERIVED	1.00	0.000	0.000	1.00

1

AQUIFER SPECIFIC VARIABLES

VARIABLE NAME	UNITS	DISTRIBUTION	PARAMETERS MEAN	STD DEV	LIMITS MIN	MAX
Particle diameter	cm	CONSTANT	0.250E-01	-999.	0.100E-08	100.
Aquifer porosity	--	CONSTANT	0.100	-999.	0.100E-08	0.990

Bulk density	g/cc	CONSTANT	2.40	-999.	0.100E-01	5.00
Aquifer thickness	m	CONSTANT	91.4	-999.	0.100E-08	0.100E+06
Source thickness (mixing zone depth)	m	DERIVED	-999.	-999.	0.100E-08	0.100E+06
Conductivity (hydraulic)	m/yr	CONSTANT	100.	-999.	0.100E-06	0.100E+09
Gradient (hydraulic)		CONSTANT	0.240E-01	-999.	0.100E-07	-999.
Groundwater seepage velocity	m/yr	DERIVED	-999.	-999.	0.100E-09	0.100E+09
Retardation coefficient	--	DERIVED	-999.	-999.	1.00	0.100E+09
Longitudinal dispersivity	m	FUNCTION OF X	-999.	-999.	-999.	-999.
Transverse dispersivity	m	FUNCTION OF X	-999.	-999.	-999.	-999.
Vertical dispersivity	m	FUNCTION OF X	-999.	-999.	-999.	-999.
Temperature of aquifer	C	CONSTANT	25.0	-999.	0.000	100.
pH	--	CONSTANT	7.50	-999.	0.300	14.0
Organic carbon content (fraction)		CONSTANT	0.300E-02	-999.	0.100E-05	1.00
Well distance from site	m	CONSTANT	30.0	-999.	1.00	-999.
Angle off center	degree	CONSTANT	0.000	-999.	0.000	360.
Well vertical distance	m	CONSTANT	0.000	-999.	0.000	1.00

CONCENTRATION AFTER SATURATED ZONE MODEL 0.1587E-02

1

U. S. E N V I R O N M E N T A L P R O T E C T I O N A G E N C Y

E X P O S U R E A S S E S S M E N T

M U L T I M E D I A M O D E L

MULTIMED - (Version 2.00 Beta - October 1996)

1

Run options
--- -------

DEFAULT

DEL RIO LF VERTICAL EXPAN
Chemical simulated is DEFAULT CHEMICAL

Option Chosen Saturated zone model
Run was DETERMIN
Infiltration input by user
Run was steady-state
Reject runs if Y coordinate outside plume
Reject runs if Z coordinate outside plume
Gaussian source used in saturated zone model

1

1

CHEMICAL SPECIFIC VARIABLES

VARIABLE NAME	UNITS	DISTRIBUTION	PARAMETERS MEAN	STD DEV	LIMITS MIN	MAX
Solid phase decay coefficient	1/yr	CONSTANT	0.000	-999.	0.000	0.100E+11
Dissolved phase decay coefficient	1/yr	CONSTANT	0.000	-999.	0.000	0.100E+11
Overall chemical decay coefficient	1/yr	CONSTANT	0.000	-999.	0.000	0.100E+11
Acid catalyzed hydrolysis rate	l/M-yr	CONSTANT	0.000	-999.	0.000	-999.
Neutral hydrolysis rate constant	1/yr	CONSTANT	0.000	-999.	0.000	-999.
Base catalyzed hydrolysis rate	l/M-yr	CONSTANT	0.000	-999.	0.000	-999.

Reference temperature	C	CONSTANT	25.0	-999.	0.000	100.
Normalized distribution coefficient	ml/g	CONSTANT	0.000	-999.	0.000	-999.
Distribution coefficient	--	DERIVED	-999.	-999.	0.000	0.100E+11
Biodegradation coefficient (sat. zone)	1/yr	CONSTANT	0.000	-999.	0.000	-999.
Air diffusion coefficient	cm2/s	CONSTANT	0.000	-999.	0.000	10.0
Reference temperature for air diffusion	C	CONSTANT	0.000	-999.	0.000	100.
Molecular weight	g/M	CONSTANT	0.000	-999.	0.000	-999.
Mole fraction of solute	--	CONSTANT	0.000	-999.	0.100E-08	1.00
Vapor pressure of solute	mm Hg	CONSTANT	0.000	-999.	0.000	100.
Henry`s law constant	atm-m^3/M	CONSTANT	0.000	-999.	0.100E-09	1.00
Overall 1st order decay sat. zone	1/yr	DERIVED	0.000	0.000	0.000	1.00
Soil/Air Boundary Layer Thickness	cm	CONSTANT	-999.	-999.	0.000	-999.
Not currently used		CONSTANT	-999.	-999.	0.000	1.00

1

SOURCE SPECIFIC VARIABLES

VARIABLE NAME	UNITS	DISTRIBUTION	PARAMETERS MEAN	STD DEV	LIMITS MIN	MAX
Infiltration rate	m/yr	CONSTANT	0.170E-03	-999.	0.100E-09	0.100E+11
Area of waste disposal unit	m^2	CONSTANT	0.320E+06	-999.	0.100E-01	-999.
Duration of pulse	yr	CONSTANT	-999.	-999.	0.100E-08	-999.
Spread of contaminant source	m	DERIVED	-999.	-999.	0.100E-08	0.100E+11
Recharge rate	m/yr	CONSTANT	0.282E-01	-999.	0.000	0.100E+11
Source decay constant	1/yr	CONSTANT	0.000	-999.	0.000	-999.
Initial concentration at landfill	mg/l	CONSTANT	1.00	-999.	0.000	-999.
Length scale of facility	m	DERIVED	-999.	-999.	0.100E-08	0.100E+11
Width scale of facility	m	DERIVED	-999.	-999.	0.100E-08	0.100E+11
Near field dilution		DERIVED	1.00	0.000	0.000	1.00

1

AQUIFER SPECIFIC VARIABLES

VARIABLE NAME	UNITS	DISTRIBUTION	PARAMETERS MEAN	STD DEV	LIMITS MIN	MAX
Particle diameter	cm	CONSTANT	0.250E-01	-999.	0.100E-08	100.
Aquifer porosity	--	CONSTANT	0.100	-999.	0.100E-08	0.990

Bulk density	g/cc	CONSTANT	2.40	-999.	0.100E-01	5.00
Aquifer thickness	m	CONSTANT	91.4	-999.	0.100E-08	0.100E+06
Source thickness (mixing zone depth)	m	DERIVED	-999.	-999.	0.100E-08	0.100E+06
Conductivity (hydraulic)	m/yr	CONSTANT	100.	-999.	0.100E-06	0.100E+09
Gradient (hydraulic)		CONSTANT	0.600E-02	-999.	0.100E-07	-999.
Groundwater seepage velocity	m/yr	DERIVED	-999.	-999.	0.100E-09	0.100E+09
Retardation coefficient	--	DERIVED	-999.	-999.	1.00	0.100E+09
Longitudinal dispersivity	m	FUNCTION OF X	-999.	-999.	-999.	-999.
Transverse dispersivity	m	FUNCTION OF X	-999.	-999.	-999.	-999.
Vertical dispersivity	m	FUNCTION OF X	-999.	-999.	-999.	-999.
Temperature of aquifer	C	CONSTANT	25.0	-999.	0.000	100.
pH	--	CONSTANT	7.50	-999.	0.300	14.0
Organic carbon content (fraction)		CONSTANT	0.300E-02	-999.	0.100E-05	1.00
Well distance from site	m	CONSTANT	30.0	-999.	1.00	-999.
Angle off center	degree	CONSTANT	0.000	-999.	0.000	360.
Well vertical distance	m	CONSTANT	0.000	-999.	0.000	1.00

CONCENTRATION AFTER SATURATED ZONE MODEL 0.6261E-02

1

U. S. E N V I R O N M E N T A L P R O T E C T I O N A G E N C Y

E X P O S U R E A S S E S S M E N T

M U L T I M E D I A M O D E L

MULTIMED - (Version 2.00 Beta - October 1996)

1

Run options
--- -------

DEFAULT

DEL RIO LF VERTICAL EXPAN
Chemical simulated is DEFAULT CHEMICAL

Option Chosen Saturated zone model
Run was DETERMIN
Infiltration input by user
Run was steady-state
Reject runs if Y coordinate outside plume
Reject runs if Z coordinate outside plume
Gaussian source used in saturated zone model

1

1

CHEMICAL SPECIFIC VARIABLES

VARIABLE NAME	UNITS	DISTRIBUTION	PARAMETERS MEAN	STD DEV	LIMITS MIN	MAX
Solid phase decay coefficient	1/yr	CONSTANT	0.000	-999.	0.000	0.100E+11
Dissolved phase decay coefficient	1/yr	CONSTANT	0.000	-999.	0.000	0.100E+11
Overall chemical decay coefficient	1/yr	CONSTANT	0.000	-999.	0.000	0.100E+11
Acid catalyzed hydrolysis rate	l/M-yr	CONSTANT	0.000	-999.	0.000	-999.
Neutral hydrolysis rate constant	1/yr	CONSTANT	0.000	-999.	0.000	-999.
Base catalyzed hydrolysis rate	l/M-yr	CONSTANT	0.000	-999.	0.000	-999.

Reference temperature	C	CONSTANT	25.0	-999.	0.000	100.
Normalized distribution coefficient	ml/g	CONSTANT	0.000	-999.	0.000	-999.
Distribution coefficient	--	DERIVED	-999.	-999.	0.000	0.100E+11
Biodegradation coefficient (sat. zone)	1/yr	CONSTANT	0.000	-999.	0.000	-999.
Air diffusion coefficient	cm2/s	CONSTANT	0.000	-999.	0.000	10.0
Reference temperature for air diffusion	C	CONSTANT	0.000	-999.	0.000	100.
Molecular weight	g/M	CONSTANT	0.000	-999.	0.000	-999.
Mole fraction of solute	--	CONSTANT	0.000	-999.	0.100E-08	1.00
Vapor pressure of solute	mm Hg	CONSTANT	0.000	-999.	0.000	100.
Henry`s law constant	atm-m^3/M	CONSTANT	0.000	-999.	0.100E-09	1.00
Overall 1st order decay sat. zone	1/yr	DERIVED	0.000	0.000	0.000	1.00
Soil/Air Boundary Layer Thickness	cm	CONSTANT	-999.	-999.	0.000	-999.
Not currently used		CONSTANT	-999.	-999.	0.000	1.00

1

SOURCE SPECIFIC VARIABLES

VARIABLE NAME	UNITS	DISTRIBUTION	PARAMETERS MEAN	STD DEV	LIMITS MIN	MAX
Infiltration rate	m/yr	CONSTANT	0.170E-03	-999.	0.100E-09	0.100E+11
Area of waste disposal unit	m^2	CONSTANT	0.320E+06	-999.	0.100E-01	-999.
Duration of pulse	yr	CONSTANT	-999.	-999.	0.100E-08	-999.
Spread of contaminant source	m	DERIVED	-999.	-999.	0.100E-08	0.100E+11
Recharge rate	m/yr	CONSTANT	0.282E-01	-999.	0.000	0.100E+11
Source decay constant	1/yr	CONSTANT	0.000	-999.	0.000	-999.
Initial concentration at landfill	mg/l	CONSTANT	1.00	-999.	0.000	-999.
Length scale of facility	m	DERIVED	-999.	-999.	0.100E-08	0.100E+11
Width scale of facility	m	DERIVED	-999.	-999.	0.100E-08	0.100E+11
Near field dilution		DERIVED	1.00	0.000	0.000	1.00

1

AQUIFER SPECIFIC VARIABLES

VARIABLE NAME	UNITS	DISTRIBUTION	PARAMETERS MEAN	STD DEV	LIMITS MIN	MAX
Particle diameter	cm	CONSTANT	0.250E-01	-999.	0.100E-08	100.
Aquifer porosity	--	CONSTANT	0.100	-999.	0.100E-08	0.990

Bulk density	g/cc	CONSTANT	2.40	-999.	0.100E-01	5.00
Aquifer thickness	m	CONSTANT	91.4	-999.	0.100E-08	0.100E+06
Source thickness (mixing zone depth)	m	DERIVED	-999.	-999.	0.100E-08	0.100E+06
Conductivity (hydraulic)	m/yr	CONSTANT	100.	-999.	0.100E-06	0.100E+09
Gradient (hydraulic)		CONSTANT	0.110E-01	-999.	0.100E-07	-999.
Groundwater seepage velocity	m/yr	DERIVED	-999.	-999.	0.100E-09	0.100E+09
Retardation coefficient	--	DERIVED	-999.	-999.	1.00	0.100E+09
Longitudinal dispersivity	m	FUNCTION OF X	-999.	-999.	-999.	-999.
Transverse dispersivity	m	FUNCTION OF X	-999.	-999.	-999.	-999.
Vertical dispersivity	m	FUNCTION OF X	-999.	-999.	-999.	-999.
Temperature of aquifer	C	CONSTANT	25.0	-999.	0.000	100.
pH	--	CONSTANT	7.50	-999.	0.300	14.0
Organic carbon content (fraction)		CONSTANT	0.300E-02	-999.	0.100E-05	1.00
Well distance from site	m	CONSTANT	24.4	-999.	1.00	-999.
Angle off center	degree	CONSTANT	0.000	-999.	0.000	360.
Well vertical distance	m	CONSTANT	0.000	-999.	0.000	1.00

CONCENTRATION AFTER SATURATED ZONE MODEL 0.3453E-02

1

U. S. E N V I R O N M E N T A L P R O T E C T I O N A G E N C Y

E X P O S U R E A S S E S S M E N T

M U L T I M E D I A M O D E L

MULTIMED - (Version 2.00 Beta - October 1996)

1

Run options
--- -------

DEFAULT

DEL RIO LF VERTICAL EXPAN
Chemical simulated is DEFAULT CHEMICAL

Option Chosen Saturated zone model
Run was DETERMIN
Infiltration input by user
Run was steady-state
Reject runs if Y coordinate outside plume
Reject runs if Z coordinate outside plume
Gaussian source used in saturated zone model

1

1

CHEMICAL SPECIFIC VARIABLES

VARIABLE NAME	UNITS	DISTRIBUTION	PARAMETERS MEAN	STD DEV	LIMITS MIN	MAX
Solid phase decay coefficient	1/yr	CONSTANT	0.000	-999.	0.000	0.100E+11
Dissolved phase decay coefficient	1/yr	CONSTANT	0.000	-999.	0.000	0.100E+11
Overall chemical decay coefficient	1/yr	CONSTANT	0.000	-999.	0.000	0.100E+11
Acid catalyzed hydrolysis rate	l/M-yr	CONSTANT	0.000	-999.	0.000	-999.
Neutral hydrolysis rate constant	1/yr	CONSTANT	0.000	-999.	0.000	-999.
Base catalyzed hydrolysis rate	l/M-yr	CONSTANT	0.000	-999.	0.000	-999.

Reference temperature	C	CONSTANT	25.0	-999.	0.000	100.
Normalized distribution coefficient	ml/g	CONSTANT	0.000	-999.	0.000	-999.
Distribution coefficient	--	DERIVED	-999.	-999.	0.000	0.100E+11
Biodegradation coefficient (sat. zone)	1/yr	CONSTANT	0.000	-999.	0.000	-999.
Air diffusion coefficient	cm2/s	CONSTANT	0.000	-999.	0.000	10.0
Reference temperature for air diffusion	C	CONSTANT	0.000	-999.	0.000	100.
Molecular weight	g/M	CONSTANT	0.000	-999.	0.000	-999.
Mole fraction of solute	--	CONSTANT	0.000	-999.	0.100E-08	1.00
Vapor pressure of solute	mm Hg	CONSTANT	0.000	-999.	0.000	100.
Henry`s law constant	atm-m^3/M	CONSTANT	0.000	-999.	0.100E-09	1.00
Overall 1st order decay sat. zone	1/yr	DERIVED	0.000	0.000	0.000	1.00
Soil/Air Boundary Layer Thickness	cm	CONSTANT	-999.	-999.	0.000	-999.
Not currently used		CONSTANT	-999.	-999.	0.000	1.00

1

SOURCE SPECIFIC VARIABLES

VARIABLE NAME	UNITS	DISTRIBUTION	PARAMETERS MEAN	STD DEV	LIMITS MIN	MAX
Infiltration rate	m/yr	CONSTANT	0.170E-03	-999.	0.100E-09	0.100E+11
Area of waste disposal unit	m^2	CONSTANT	0.320E+06	-999.	0.100E-01	-999.
Duration of pulse	yr	CONSTANT	-999.	-999.	0.100E-08	-999.
Spread of contaminant source	m	DERIVED	-999.	-999.	0.100E-08	0.100E+11
Recharge rate	m/yr	CONSTANT	0.282E-01	-999.	0.000	0.100E+11
Source decay constant	1/yr	CONSTANT	0.000	-999.	0.000	-999.
Initial concentration at landfill	mg/l	CONSTANT	1.00	-999.	0.000	-999.
Length scale of facility	m	DERIVED	-999.	-999.	0.100E-08	0.100E+11
Width scale of facility	m	DERIVED	-999.	-999.	0.100E-08	0.100E+11
Near field dilution		DERIVED	1.00	0.000	0.000	1.00

1

AQUIFER SPECIFIC VARIABLES

VARIABLE NAME	UNITS	DISTRIBUTION	PARAMETERS MEAN	STD DEV	LIMITS MIN	MAX
Particle diameter	cm	CONSTANT	0.250E-01	-999.	0.100E-08	100.
Aquifer porosity	--	CONSTANT	0.100	-999.	0.100E-08	0.990

Bulk density	g/cc	CONSTANT	2.40	-999.	0.100E-01	5.00
Aquifer thickness	m	CONSTANT	91.4	-999.	0.100E-08	0.100E+06
Source thickness (mixing zone depth)	m	DERIVED	-999.	-999.	0.100E-08	0.100E+06
Conductivity (hydraulic)	m/yr	CONSTANT	100.	-999.	0.100E-06	0.100E+09
Gradient (hydraulic)		CONSTANT	0.110E-01	-999.	0.100E-07	-999.
Groundwater seepage velocity	m/yr	DERIVED	-999.	-999.	0.100E-09	0.100E+09
Retardation coefficient	--	DERIVED	-999.	-999.	1.00	0.100E+09
Longitudinal dispersivity	m	FUNCTION OF X	-999.	-999.	-999.	-999.
Transverse dispersivity	m	FUNCTION OF X	-999.	-999.	-999.	-999.
Vertical dispersivity	m	FUNCTION OF X	-999.	-999.	-999.	-999.
Temperature of aquifer	C	CONSTANT	25.0	-999.	0.000	100.
pH	--	CONSTANT	7.50	-999.	0.300	14.0
Organic carbon content (fraction)		CONSTANT	0.300E-02	-999.	0.100E-05	1.00
Well distance from site	m	CONSTANT	36.6	-999.	1.00	-999.
Angle off center	degree	CONSTANT	0.000	-999.	0.000	360.
Well vertical distance	m	CONSTANT	0.000	-999.	0.000	1.00

CONCENTRATION AFTER SATURATED ZONE MODEL 0.3432E-02

1

U. S. E N V I R O N M E N T A L P R O T E C T I O N A G E N C Y

E X P O S U R E A S S E S S M E N T

M U L T I M E D I A M O D E L

MULTIMED - (Version 2.00 Beta - October 1996)

1

Run options
--- -------

DEFAULT

DEL RIO LF VERTICAL EXPAN
Chemical simulated is DEFAULT CHEMICAL

Option Chosen Saturated zone model
Run was DETERMIN
Infiltration input by user
Run was steady-state
Reject runs if Y coordinate outside plume
Reject runs if Z coordinate outside plume
Gaussian source used in saturated zone model

1

1

CHEMICAL SPECIFIC VARIABLES

VARIABLE NAME	UNITS	DISTRIBUTION	PARAMETERS MEAN	STD DEV	LIMITS MIN	MAX
Solid phase decay coefficient	1/yr	CONSTANT	0.000	-999.	0.000	0.100E+11
Dissolved phase decay coefficient	1/yr	CONSTANT	0.000	-999.	0.000	0.100E+11
Overall chemical decay coefficient	1/yr	CONSTANT	0.000	-999.	0.000	0.100E+11
Acid catalyzed hydrolysis rate	l/M-yr	CONSTANT	0.000	-999.	0.000	-999.
Neutral hydrolysis rate constant	1/yr	CONSTANT	0.000	-999.	0.000	-999.
Base catalyzed hydrolysis rate	l/M-yr	CONSTANT	0.000	-999.	0.000	-999.

Reference temperature	C	CONSTANT	25.0	-999.	0.000	100.
Normalized distribution coefficient	ml/g	CONSTANT	0.000	-999.	0.000	-999.
Distribution coefficient	--	DERIVED	-999.	-999.	0.000	0.100E+11
Biodegradation coefficient (sat. zone)	1/yr	CONSTANT	0.000	-999.	0.000	-999.
Air diffusion coefficient	cm2/s	CONSTANT	0.000	-999.	0.000	10.0
Reference temperature for air diffusion	C	CONSTANT	0.000	-999.	0.000	100.
Molecular weight	g/M	CONSTANT	0.000	-999.	0.000	-999.
Mole fraction of solute	--	CONSTANT	0.000	-999.	0.100E-08	1.00
Vapor pressure of solute	mm Hg	CONSTANT	0.000	-999.	0.000	100.
Henry`s law constant	atm-m^3/M	CONSTANT	0.000	-999.	0.100E-09	1.00
Overall 1st order decay sat. zone	1/yr	DERIVED	0.000	0.000	0.000	1.00
Soil/Air Boundary Layer Thickness	cm	CONSTANT	-999.	-999.	0.000	-999.
Not currently used		CONSTANT	-999.	-999.	0.000	1.00

1

SOURCE SPECIFIC VARIABLES

VARIABLE NAME	UNITS	DISTRIBUTION	PARAMETERS MEAN	STD DEV	LIMITS MIN	MAX
Infiltration rate	m/yr	CONSTANT	0.250E-03	-999.	0.100E-09	0.100E+11
Area of waste disposal unit	m^2	CONSTANT	0.320E+06	-999.	0.100E-01	-999.
Duration of pulse	yr	CONSTANT	-999.	-999.	0.100E-08	-999.
Spread of contaminant source	m	DERIVED	-999.	-999.	0.100E-08	0.100E+11
Recharge rate	m/yr	CONSTANT	0.282E-01	-999.	0.000	0.100E+11
Source decay constant	1/yr	CONSTANT	0.000	-999.	0.000	-999.
Initial concentration at landfill	mg/l	CONSTANT	1.00	-999.	0.000	-999.
Length scale of facility	m	DERIVED	-999.	-999.	0.100E-08	0.100E+11
Width scale of facility	m	DERIVED	-999.	-999.	0.100E-08	0.100E+11
Near field dilution		DERIVED	1.00	0.000	0.000	1.00

1

AQUIFER SPECIFIC VARIABLES

VARIABLE NAME	UNITS	DISTRIBUTION	PARAMETERS MEAN	STD DEV	LIMITS MIN	MAX
Particle diameter	cm	CONSTANT	0.250E-01	-999.	0.100E-08	100.
Aquifer porosity	--	CONSTANT	0.100	-999.	0.100E-08	0.990

Bulk density	g/cc	CONSTANT	2.40	-999.	0.100E-01	5.00
Aquifer thickness	m	CONSTANT	91.4	-999.	0.100E-08	0.100E+06
Source thickness (mixing zone depth)	m	DERIVED	-999.	-999.	0.100E-08	0.100E+06
Conductivity (hydraulic)	m/yr	CONSTANT	100.	-999.	0.100E-06	0.100E+09
Gradient (hydraulic)		CONSTANT	0.110E-01	-999.	0.100E-07	-999.
Groundwater seepage velocity	m/yr	DERIVED	-999.	-999.	0.100E-09	0.100E+09
Retardation coefficient	--	DERIVED	-999.	-999.	1.00	0.100E+09
Longitudinal dispersivity	m	FUNCTION OF X	-999.	-999.	-999.	-999.
Transverse dispersivity	m	FUNCTION OF X	-999.	-999.	-999.	-999.
Vertical dispersivity	m	FUNCTION OF X	-999.	-999.	-999.	-999.
Temperature of aquifer	C	CONSTANT	25.0	-999.	0.000	100.
pH	--	CONSTANT	7.50	-999.	0.300	14.0
Organic carbon content (fraction)		CONSTANT	0.300E-02	-999.	0.100E-05	1.00
Well distance from site	m	CONSTANT	30.0	-999.	1.00	-999.
Angle off center	degree	CONSTANT	0.000	-999.	0.000	360.
Well vertical distance	m	CONSTANT	0.000	-999.	0.000	1.00

CONCENTRATION AFTER SATURATED ZONE MODEL 0.5060E-02

1 U. S. E N V I R O N M E N T A L P R O T E C T I O N A G E N C Y

E X P O S U R E A S S E S S M E N T

M U L T I M E D I A M O D E L

MULTIMED - (Version 2.00 Beta - October 1996)

1
Run options
--- -------

DEFAULT

DEL RIO LF VERTICAL EXPAN
Chemical simulated is DEFAULT CHEMICAL

Option Chosen Saturated zone model
Run was DETERMIN
Infiltration input by user
Run was steady-state
Reject runs if Y coordinate outside plume
Reject runs if Z coordinate outside plume
Gaussian source used in saturated zone model
1
1

CHEMICAL SPECIFIC VARIABLES

VARIABLE NAME	UNITS	DISTRIBUTION	PARAMETERS MEAN	STD DEV	LIMITS MIN	MAX
Solid phase decay coefficient	1/yr	CONSTANT	0.000	-999.	0.000	0.100E+11
Dissolved phase decay coefficient	1/yr	CONSTANT	0.000	-999.	0.000	0.100E+11
Overall chemical decay coefficient	1/yr	CONSTANT	0.000	-999.	0.000	0.100E+11
Acid catalyzed hydrolysis rate	l/M-yr	CONSTANT	0.000	-999.	0.000	-999.
Neutral hydrolysis rate constant	1/yr	CONSTANT	0.000	-999.	0.000	-999.
Base catalyzed hydrolysis rate	l/M-yr	CONSTANT	0.000	-999.	0.000	-999.
Reference temperature	C	CONSTANT	25.0	-999.	0.000	100.

Normalized distribution coefficient	ml/g	CONSTANT	0.000	-999.	0.000	-999.
Distribution coefficient	--	DERIVED	-999.	-999.	0.000	0.100E+11
Biodegradation coefficient (sat. zone)	1/yr	CONSTANT	0.000	-999.	0.000	-999.
Air diffusion coefficient	cm2/s	CONSTANT	0.000	-999.	0.000	10.0
Reference temperature for air diffusion	C	CONSTANT	0.000	-999.	0.000	100.
Molecular weight	g/M	CONSTANT	0.000	-999.	0.000	-999.
Mole fraction of solute	--	CONSTANT	0.000	-999.	0.100E-08	1.00
Vapor pressure of solute	mm Hg	CONSTANT	0.000	-999.	0.000	100.
Henry`s law constant	atm-m^3/M	CONSTANT	0.000	-999.	0.100E-09	1.00
Overall 1st order decay sat. zone	1/yr	DERIVED	0.000	0.000	0.000	1.00
Soil/Air Boundary Layer Thickness	cm	CONSTANT	-999.	-999.	0.000	-999.
Not currently used		CONSTANT	-999.	-999.	0.000	1.00

1

SOURCE SPECIFIC VARIABLES

VARIABLE NAME	UNITS	DISTRIBUTION	PARAMETERS MEAN	PARAMETERS STD DEV	LIMITS MIN	LIMITS MAX
Infiltration rate	m/yr	CONSTANT	0.700E-04	-999.	0.100E-09	0.100E+11
Area of waste disposal unit	m^2	CONSTANT	0.320E+06	-999.	0.100E-01	-999.
Duration of pulse	yr	CONSTANT	-999.	-999.	0.100E-08	-999.
Spread of contaminant source	m	DERIVED	-999.	-999.	0.100E-08	0.100E+11
Recharge rate	m/yr	CONSTANT	0.282E-01	-999.	0.000	0.100E+11
Source decay constant	1/yr	CONSTANT	0.000	-999.	0.000	-999.
Initial concentration at landfill	mg/l	CONSTANT	1.00	-999.	0.000	-999.
Length scale of facility	m	DERIVED	-999.	-999.	0.100E-08	0.100E+11
Width scale of facility	m	DERIVED	-999.	-999.	0.100E-08	0.100E+11
Near field dilution		DERIVED	1.00	0.000	0.000	1.00

1

AQUIFER SPECIFIC VARIABLES

VARIABLE NAME	UNITS	DISTRIBUTION	PARAMETERS MEAN	PARAMETERS STD DEV	LIMITS MIN	LIMITS MAX
Particle diameter	cm	CONSTANT	0.250E-01	-999.	0.100E-08	100.
Aquifer porosity	--	CONSTANT	0.100	-999.	0.100E-08	0.990
Bulk density	g/cc	CONSTANT	2.40	-999.	0.100E-01	5.00

Aquifer thickness	m	CONSTANT	91.4	-999.	0.100E-08	0.100E+06
Source thickness (mixing zone depth)	m	DERIVED	-999.	-999.	0.100E-08	0.100E+06
Conductivity (hydraulic)	m/yr	CONSTANT	100.	-999.	0.100E-06	0.100E+09
Gradient (hydraulic)		CONSTANT	0.110E-01	-999.	0.100E-07	-999.
Groundwater seepage velocity	m/yr	DERIVED	-999.	-999.	0.100E-09	0.100E+09
Retardation coefficient	--	DERIVED	-999.	-999.	1.00	0.100E+09
Longitudinal dispersivity	m	FUNCTION OF X	-999.	-999.	-999.	-999.
Transverse dispersivity	m	FUNCTION OF X	-999.	-999.	-999.	-999.
Vertical dispersivity	m	FUNCTION OF X	-999.	-999.	-999.	-999.
Temperature of aquifer	C	CONSTANT	25.0	-999.	0.000	100.
pH	--	CONSTANT	7.50	-999.	0.300	14.0
Organic carbon content (fraction)		CONSTANT	0.300E-02	-999.	0.100E-05	1.00
Well distance from site	m	CONSTANT	30.0	-999.	1.00	-999.
Angle off center	degree	CONSTANT	0.000	-999.	0.000	360.
Well vertical distance	m	CONSTANT	0.000	-999.	0.000	1.00

CONCENTRATION AFTER SATURATED ZONE MODEL 0.1419E-02

1

U. S. E N V I R O N M E N T A L P R O T E C T I O N A G E N C Y

E X P O S U R E A S S E S S M E N T

M U L T I M E D I A M O D E L

MULTIMED - (Version 2.00 Beta - October 1996)

1

Run options
--- -------

DEFAULT

DEL RIO LF VERTICAL EXPAN
Chemical simulated is DEFAULT CHEMICAL

Option Chosen Saturated zone model
Run was DETERMIN
Infiltration input by user
Run was steady-state
Reject runs if Y coordinate outside plume
Reject runs if Z coordinate outside plume
Gaussian source used in saturated zone model

1

1

CHEMICAL SPECIFIC VARIABLES

VARIABLE NAME	UNITS	DISTRIBUTION	PARAMETERS MEAN	STD DEV	LIMITS MIN	MAX
Solid phase decay coefficient	1/yr	CONSTANT	0.000	-999.	0.000	0.100E+11
Dissolved phase decay coefficient	1/yr	CONSTANT	0.000	-999.	0.000	0.100E+11
Overall chemical decay coefficient	1/yr	CONSTANT	0.000	-999.	0.000	0.100E+11
Acid catalyzed hydrolysis rate	l/M-yr	CONSTANT	0.000	-999.	0.000	-999.
Neutral hydrolysis rate constant	1/yr	CONSTANT	0.000	-999.	0.000	-999.
Base catalyzed hydrolysis rate	l/M-yr	CONSTANT	0.000	-999.	0.000	-999.

Reference temperature	C	CONSTANT	25.0	-999.	0.000	100.
Normalized distribution coefficient	ml/g	CONSTANT	0.000	-999.	0.000	-999.
Distribution coefficient	--	DERIVED	-999.	-999.	0.000	0.100E+11
Biodegradation coefficient (sat. zone)	1/yr	CONSTANT	0.000	-999.	0.000	-999.
Air diffusion coefficient	cm2/s	CONSTANT	0.000	-999.	0.000	10.0
Reference temperature for air diffusion	C	CONSTANT	0.000	-999.	0.000	100.
Molecular weight	g/M	CONSTANT	0.000	-999.	0.000	-999.
Mole fraction of solute	--	CONSTANT	0.000	-999.	0.100E-08	1.00
Vapor pressure of solute	mm Hg	CONSTANT	0.000	-999.	0.000	100.
Henry`s law constant	atm-m^3/M	CONSTANT	0.000	-999.	0.100E-09	1.00
Overall 1st order decay sat. zone	1/yr	DERIVED	0.000	0.000	0.000	1.00
Soil/Air Boundary Layer Thickness	cm	CONSTANT	-999.	-999.	0.000	-999.
Not currently used		CONSTANT	-999.	-999.	0.000	1.00

1

SOURCE SPECIFIC VARIABLES

VARIABLE NAME	UNITS	DISTRIBUTION	PARAMETERS MEAN	STD DEV	LIMITS MIN	MAX
Infiltration rate	m/yr	CONSTANT	0.170E-03	-999.	0.100E-09	0.100E+11
Area of waste disposal unit	m^2	CONSTANT	0.320E+06	-999.	0.100E-01	-999.
Duration of pulse	yr	CONSTANT	-999.	-999.	0.100E-08	-999.
Spread of contaminant source	m	DERIVED	-999.	-999.	0.100E-08	0.100E+11
Recharge rate	m/yr	CONSTANT	0.182E-01	-999.	0.000	0.100E+11
Source decay constant	1/yr	CONSTANT	0.000	-999.	0.000	-999.
Initial concentration at landfill	mg/l	CONSTANT	1.00	-999.	0.000	-999.
Length scale of facility	m	DERIVED	-999.	-999.	0.100E-08	0.100E+11
Width scale of facility	m	DERIVED	-999.	-999.	0.100E-08	0.100E+11
Near field dilution		DERIVED	1.00	0.000	0.000	1.00

1

AQUIFER SPECIFIC VARIABLES

VARIABLE NAME	UNITS	DISTRIBUTION	PARAMETERS MEAN	STD DEV	LIMITS MIN	MAX
Particle diameter	cm	CONSTANT	0.250E-01	-999.	0.100E-08	100.
Aquifer porosity	--	CONSTANT	0.100	-999.	0.100E-08	0.990

Bulk density	g/cc	CONSTANT	2.40	-999.	0.100E-01	5.00
Aquifer thickness	m	CONSTANT	91.4	-999.	0.100E-08	0.100E+06
Source thickness (mixing zone depth)	m	DERIVED	-999.	-999.	0.100E-08	0.100E+06
Conductivity (hydraulic)	m/yr	CONSTANT	100.	-999.	0.100E-06	0.100E+09
Gradient (hydraulic)		CONSTANT	0.110E-01	-999.	0.100E-07	-999.
Groundwater seepage velocity	m/yr	DERIVED	-999.	-999.	0.100E-09	0.100E+09
Retardation coefficient	--	DERIVED	-999.	-999.	1.00	0.100E+09
Longitudinal dispersivity	m	FUNCTION OF X	-999.	-999.	-999.	-999.
Transverse dispersivity	m	FUNCTION OF X	-999.	-999.	-999.	-999.
Vertical dispersivity	m	FUNCTION OF X	-999.	-999.	-999.	-999.
Temperature of aquifer	C	CONSTANT	25.0	-999.	0.000	100.
pH	--	CONSTANT	7.50	-999.	0.300	14.0
Organic carbon content (fraction)		CONSTANT	0.300E-02	-999.	0.100E-05	1.00
Well distance from site	m	CONSTANT	30.0	-999.	1.00	-999.
Angle off center	degree	CONSTANT	0.000	-999.	0.000	360.
Well vertical distance	m	CONSTANT	0.000	-999.	0.000	1.00

CONCENTRATION AFTER SATURATED ZONE MODEL 0.3454E-02

1

U. S. E N V I R O N M E N T A L P R O T E C T I O N A G E N C Y

E X P O S U R E A S S E S S M E N T

M U L T I M E D I A M O D E L

MULTIMED - (Version 2.00 Beta - October 1996)

1

Run options
--- -------

DEFAULT

DEL RIO LF VERTICAL EXPAN
Chemical simulated is DEFAULT CHEMICAL

Option Chosen Saturated zone model
Run was DETERMIN
Infiltration input by user
Run was steady-state
Reject runs if Y coordinate outside plume
Reject runs if Z coordinate outside plume
Gaussian source used in saturated zone model

1

1

CHEMICAL SPECIFIC VARIABLES

VARIABLE NAME	UNITS	DISTRIBUTION	PARAMETERS MEAN	STD DEV	LIMITS MIN	MAX
Solid phase decay coefficient	1/yr	CONSTANT	0.000	-999.	0.000	0.100E+11
Dissolved phase decay coefficient	1/yr	CONSTANT	0.000	-999.	0.000	0.100E+11
Overall chemical decay coefficient	1/yr	CONSTANT	0.000	-999.	0.000	0.100E+11
Acid catalyzed hydrolysis rate	l/M-yr	CONSTANT	0.000	-999.	0.000	-999.
Neutral hydrolysis rate constant	1/yr	CONSTANT	0.000	-999.	0.000	-999.
Base catalyzed hydrolysis rate	l/M-yr	CONSTANT	0.000	-999.	0.000	-999.

Reference temperature	C	CONSTANT	25.0	-999.	0.000	100.
Normalized distribution coefficient	ml/g	CONSTANT	0.000	-999.	0.000	-999.
Distribution coefficient	--	DERIVED	-999.	-999.	0.000	0.100E+11
Biodegradation coefficient (sat. zone)	1/yr	CONSTANT	0.000	-999.	0.000	-999.
Air diffusion coefficient	cm2/s	CONSTANT	0.000	-999.	0.000	10.0
Reference temperature for air diffusion	C	CONSTANT	0.000	-999.	0.000	100.
Molecular weight	g/M	CONSTANT	0.000	-999.	0.000	-999.
Mole fraction of solute	--	CONSTANT	0.000	-999.	0.100E-08	1.00
Vapor pressure of solute	mm Hg	CONSTANT	0.000	-999.	0.000	100.
Henry`s law constant	atm-m^3/M	CONSTANT	0.000	-999.	0.100E-09	1.00
Overall 1st order decay sat. zone	1/yr	DERIVED	0.000	0.000	0.000	1.00
Soil/Air Boundary Layer Thickness	cm	CONSTANT	-999.	-999.	0.000	-999.
Not currently used		CONSTANT	-999.	-999.	0.000	1.00

1

SOURCE SPECIFIC VARIABLES

VARIABLE NAME	UNITS	DISTRIBUTION	PARAMETERS MEAN	STD DEV	LIMITS MIN	MAX
Infiltration rate	m/yr	CONSTANT	0.170E-03	-999.	0.100E-09	0.100E+11
Area of waste disposal unit	m^2	CONSTANT	0.320E+06	-999.	0.100E-01	-999.
Duration of pulse	yr	CONSTANT	-999.	-999.	0.100E-08	-999.
Spread of contaminant source	m	DERIVED	-999.	-999.	0.100E-08	0.100E+11
Recharge rate	m/yr	CONSTANT	0.382E-01	-999.	0.000	0.100E+11
Source decay constant	1/yr	CONSTANT	0.000	-999.	0.000	-999.
Initial concentration at landfill	mg/l	CONSTANT	1.00	-999.	0.000	-999.
Length scale of facility	m	DERIVED	-999.	-999.	0.100E-08	0.100E+11
Width scale of facility	m	DERIVED	-999.	-999.	0.100E-08	0.100E+11
Near field dilution		DERIVED	1.00	0.000	0.000	1.00

1

AQUIFER SPECIFIC VARIABLES

VARIABLE NAME	UNITS	DISTRIBUTION	PARAMETERS MEAN	STD DEV	LIMITS MIN	MAX
Particle diameter	cm	CONSTANT	0.250E-01	-999.	0.100E-08	100.
Aquifer porosity	--	CONSTANT	0.100	-999.	0.100E-08	0.990

Bulk density	g/cc	CONSTANT	2.40	-999.	0.100E-01	5.00
Aquifer thickness	m	CONSTANT	91.4	-999.	0.100E-08	0.100E+06
Source thickness (mixing zone depth)	m	DERIVED	-999.	-999.	0.100E-08	0.100E+06
Conductivity (hydraulic)	m/yr	CONSTANT	100.	-999.	0.100E-06	0.100E+09
Gradient (hydraulic)		CONSTANT	0.110E-01	-999.	0.100E-07	-999.
Groundwater seepage velocity	m/yr	DERIVED	-999.	-999.	0.100E-09	0.100E+09
Retardation coefficient	--	DERIVED	-999.	-999.	1.00	0.100E+09
Longitudinal dispersivity	m	FUNCTION OF X	-999.	-999.	-999.	-999.
Transverse dispersivity	m	FUNCTION OF X	-999.	-999.	-999.	-999.
Vertical dispersivity	m	FUNCTION OF X	-999.	-999.	-999.	-999.
Temperature of aquifer	C	CONSTANT	25.0	-999.	0.000	100.
pH	--	CONSTANT	7.50	-999.	0.300	14.0
Organic carbon content (fraction)		CONSTANT	0.300E-02	-999.	0.100E-05	1.00
Well distance from site	m	CONSTANT	30.0	-999.	1.00	-999.
Angle off center	degree	CONSTANT	0.000	-999.	0.000	360.
Well vertical distance	m	CONSTANT	0.000	-999.	0.000	1.00

CONCENTRATION AFTER SATURATED ZONE MODEL 0.3433E-02

CITY OF DEL RIO LANDFILL

VAL VERDE COUNTY, TEXAS
TCEQ PERMIT NO. MSW-207B

MAJOR PERMIT AMENDMENT APPLICATION
PART III — SITE DEVELOPMENT PLAN

APPENDIX IIIN
NO MIGRATION DEMONSTRATION

Prepared for

City of Del Rio

October 2021

Revision 1 January 2022
Revision 2 March 2022
Revisions 3 May 2022
Revision 4 June 2022

Prepared by

CP&Y Inc
TPBE Registration No. F-1741
1820 Regal Row, Suite 200
Dallas, TX 75235
214-638-0500

TABLE OF CONTENTS

TABLES

FIGURES

APPENDIX

Table 6-1 – Landfill Conditions Modeled in HELP

Area	Active Condition 1-Year Timeframe	Interim Condition 23-Year Timeframe	Closed Condition 30-Year Timeframe
Subtitle D Area	50 feet of waste with intermediate cover	50 feet of waste with intermediate cover	80 feet of waste with final cover
Pre-Subtitle D with Overliner	60 feet of waste with intermediate cover	60 feet of waste with intermediate cover	60 feet of waste with final cover

The active stage of the landfill was modeled for one year with intermediate or daily cover. A waste height of 50 feet is used for the active and interim conditions based on a bottom of waste grade elevation of 1021 ft-msl and an average top of waste grade elevation of 1070 ft-msl for the Subtitle-D area. A waste height of 60 feet was used for the pre-Subtitle-D area based on an assumed bottom of waste elevation at 1040 ft-msl and an average top of waste at 1100 ft-msl. The interim stages with intermediate cover were modeled for 23 years based on the projected site life. The site life calculations are included in Appendix IIIB. The closed landfill condition was modeled for 30 years based on TCEQ's post-closure period.

The evaporative zone depth was selected to be 10 inches for the active and interim cases and 12 inches for the closed case. The leaf area index was selected 2 for the interim cases and 4.5 for the closed case based on the selected ground area. The Soil Conservation Service (SCS) runoff curve numbers were calculated by HELP based on soil data and expected ground cover, surface slope, and slope length.. The interim cases utilize the default curve number assigned by the HELP model which is 87.9 and corresponds to "fair" ground cover. The percent runoff area used varies between 80. This is representative of the intermediate cover, which will be 12 inches of compacted soil with 60 percent or more vegetation coverage as specified in Section 3 of Appendix IIIH-E (allows a soil loss up to 50 ton/acre-yr for intermediate cover which equates to 60 percent vegetation coverage). The final case models a curve number of 82 and percent runoff area of 100, which corresponds to "good" ground cover. This is representative of the final cover, which will have a minimum 90 percent vegetation coverage as specified in Section 2.2 of Appendix IIIE.

6.1.2.1 MOISTURE CONTENT AND FIELD CAPACITY

The initial moisture content was set at field capacity for all profile layers except the compacted clay barrier layer and the waste layer. HELP automatically sets the initial moisture content for a compacted clay barrier layer at porosity that is fully saturated. Refer to Appendix IIIK-A for additional information.

6.1.2.2 CLIMATE DATA INPUT

Precipitation data was synthetically simulated based on HELP V4 model program simulation using the latitude and longitude for Del Rio, Texas. The average annual precipitation over the modeled 30-year period was 18.19 inches. Temperature and solar radiation data were also synthetically generated by the HELP model using program defaults for Del Rio, Texas.

6.1.2.3 LANDFILL PROFILE

The profile presented below includes a clay liner with a standard Subtitle D final cover system. For additional information on the Liner Quality Control Plan refer to Appendix IIID.

- **Liner System** – The Subtitle D clay liner designed for developed and undeveloped cells consists of a 24-inch-thick compacted clay liner with a hydraulic conductivity of $1x10^{-7}$ cm/s. Default soil characteristics from the HELP model were selected for the compacted clay liner.

The HELP model was also used to calculate the rainfall recharge rate for the Del Rio Clay. The HELP output is included in Appendix IIIN-B.

The limits of waste, which is approximately 79 acres, was used to set the area of disposal unit in the module. Since the area of the disposal unit was identified, the length and width of the scale of the facility were derived by MULTIMED. The duration of pulse was set to 10,000 years. The initial concentration at landfill was set to one as is typical when calculating the dilution-attenuation factor (DAF).

Table 6-3 – Source Specific Data

Variable Name	Unit	Value	Comments
Infiltration rate	m/yr	1.7×10^{-4}	Derived from HELP (Appendix IIIK-A, page IIIK-A-4B)
Area of disposal unit	m^2	320,000	Limits of waste area
Spread of contaminant source	m	-	Derived by MULTIMED.
Recharge rate	m/yr	0.0282	Derived from HELP (Appendix IIIN-B)
Initial concentration at landfill	mg/l	1.0	Set at 1.0 to find DAF
Duration of pulse	yr	10,000	Assumed
Length scale of facility	m	-	Derived by MULTIMED.
Width scale of facility	m	-	Derived by MULTIMED.

The two modules that MULTIMED uses to model the unsaturated zone are transport and flow modules. Input parameters for the unsaturated flow module are described below. The unsaturated zone is between the bottom of the landfill liner and the top of the Salmon Peak. Based on the bedrock contours on the top of the Edwards hydrologic unit shown on Figure 4.1, the Edwards (Salmon Peak) elevation contour (940 ft-msl) was selected to represent the uppermost aquifer underlying the landfill. For this demonstration, the uppermost aquifer is located 78 feet (in the vertical direction) from the bottom of liner elevation. The hydraulic conductivity for the Del Rio Clay used in the model is 2.0×10^{-7} cm/sec. This value is obtained from the November 1994 TETCO geotechnical evaluation report included in Appendix IIIJ-C, page IIIJ-C-91. The hydraulic conductivity was calculated based on the soil parameters for the top 60 feet of the Del Rio Clay. The Del Rio Clay below 60 feet is more compact and less permeable, as the materials are not weathered, contain little to no moisture, and any existing secondary structures would be tightly closed from overburden. Since the 78 feet of Del Rio Clay between the bottom of liner and the top of the Salmon Peak was modeled as one layer this hydraulic conductivity value is considered conservative. The unsaturated zone porosity requires the effective porosity, which is part of the total porosity which is effective at transmitting water. Unsaturated zone porosity is 0.02 for clay and is dimensionless. The residual water content is the amount of the total water content which can't be removed from the soil, even under large suction pressure because it adheres to the soil grains. This value was obtained using Table 6-4 of the Manual for the Multimedia Exposure Assessment Model for clay. The ALPHA van Genuchten and BETA Van Genuchten coefficients were also obtained using Tabel 6-5 of the Manual for the Multimedia Exposure Assessment Model for clays. The Van Genuchten coefficients are used to describe (1) the pressure head versus water saturation relationships and (2) the relationship between relative permeability and water saturation. Tabel 6-4 lists the parameters used for the unsaturated flow module.

Table 6-6 – Aquifer Specific Data

Variable Name	Unit	Value	Comments
Particle diameter	cm	0.025	Obtained from Table 6-10 of the Manual for the Multimedia Exposure Assessment Model.
Aquifer porosity	unitless	0.10	Obtained from the TETCO Geotechnical Report
Bulk density	g/cc	2.40	Obtained from the TETCO Geotechnical Report
Aquifer thickness	m	91.4	Thickness of the Salmon Peak. Obtained from the TETCO Geotechnical Report. See Figure 3-1 in this appendix.
Mixing zone depth	m		Derived by MULTIMED.
Hydraulic conductivity	m/yr	50	Obtained from the TETCO Geotechnical Report (50 to 500 m/yr)
Hydraulic gradient	unitless	0.011	Section 4.1 of this appendix.
Groundwater seepage velocity	m/yr		Derived by MULTIMED.
Retardation coefficient	unitless		Derived by MULTIMED.
Longitudinal dispersity	m		Derived by MULTIMED.
Transversal dispersity	m		Derived by MULTIMED.
Vertical dispersity	m		Derived by MULTIMED.
Organic carbon content	%	0.003	Conservative assumption.
Receptor well distance	m	1	Conservative assumption.

6.2.2 Sensitivity Analysis

According to the EPA's "Preparing No-Migration Demonstration for Municipal Solid Waste Disposal Facilities: Screening Tool" the five variables that significantly influence the time of travel of leachate from the landfill to the uppermost aquifer are (1) depth of groundwater, (2) permeability of the soil, (3) the precipitation rate, (4) the evapotranspiration potential, and (5) the net infiltration rate. When conducting the sensitivity analyses, the recharge rate and net infiltration rates were altered to account for the precipitation rate and evapotranspiration potential since the HELP model utilizes these parameters in the net infiltration and rechange rate calculations. In addition to parameters mentioned above, the parameters below were also altered to test the sensitivity to time of travel.

- Aquifer hydraulic conductivity (Aquifer Module)
- Aquifer thickness (Aquifer Module)
- Aquifer porosity (Aquifer Module)
- Hydraulic gradient (Aquifer Module)
- Saturated hydraulic conductivity (Unsaturated Flow Module)
- Unsaturated Zone porosity (Unsaturated Flow Module)

The base model calculated time of travel to be 6000 years. The output files for the MULTIMED runs are included in Appendix IIIN-A. Table 6-7 shows the input parameters that were used to test the model sensitivity to calculate the time of travel. Two values were selected for each parameter shown in Table 6-7 to test the sensitivity of the model. One value being higher and one being lower than the number being used in the base model. As shown in the table below, the four parameters impacting the time of travel are (1) the saturated hydraulic conductivity, (2) unsaturated zone porosity, (3) depth of the unsaturated zone, and (4) infiltration rate.

Table 6- 7– Sensitivity of Time of Travel to Input Parameters

Variable Name	Sensitivity Values	Time of Travel with Sensitivity Values (yrs)*
Aquifer hydraulic conductivity	25 m/yr	1850
	75 m/yr	1850
Aquifer thickness	45.7 m	1850
	183 m	1850
Aquifer porosity	0.05	1850
	0.606	1850
Hydraulic gradient	0.0015	1850
	0.150	1850
Saturated hydraulic conductivity	0.000072 cm/hr	1650
	0.0072 cm/hr	2100
Unsaturated zone porosity	0.0020	450
	0.20	More than 10,000
Depth of the unsaturated zone	15 m	750
	5 m	200
Infiltration rate	0.00007 m/yr	4000
	0.00025 m/yr	1200
Recharge rate	0.282 m/yr	1850
	0.00282 m/yr	1850

*The base model time of travel is 1850 yrs.

As shown in Tabel 6-7, unsaturated zone porosity, infiltration rate and the depth of the unsaturated zone input parameters impact the time of travel. The unsaturated zone porosity input in MULTIMED is the effective porosity. The effective porosity is that part of the total porosity which is effective at transmitting water. A low unsaturated zone porosity results in a shorter time of travel. Infiltration rate is the second input that varies the time of travel. High infiltration rate increases the speed of contaminate entering the soil resulting in a low time of travel. A decrease in the infiltration rate will slow down the time of travel as shown in the table above. The change in the depth of unsaturated zone also varied the time of travel. Decreasing the depth of the unsaturated zone had the most impact on the time of travel. Using a depth of 5 meters for the unsaturated zone, which assumes that the Salmon Peak is 5 meters below the bottom of the liner, the time of travel to the upper most aquifer is 250 years. Site life of the Del Rio Landfill is approximately 21 years. So that makes the Del Rio Landfill overall site life 51 years, including the post closure period. The MULTIMED model demonstrates that the time required for the leachate to migrate from the bottom of the landfill down to the uppermost aquifer, exceeds the total site life of the landfill, including the post-closure period. As a consequence, the site meets the requirements of §330.401(d).

APPENDIX IIIN-A

MULTIMED MODEL

STATE OF TEXAS
JAMES W. ROBERTS
GEOLOGY
12639
LICENSED
PROFESSIONAL GEOSCIENTIST

06/22/2022

```
1
                    U. S.   E N V I R O N M E N T A L   P R O T E C T I O N   A G E N C Y

                                E X P O S U R E   A S S E S S M E N T

                                  M U L T I M E D I A   M O D E L

                              MULTIMED - (Version 2.00 Beta - October 1996)
1
 Run options
 --- -------



 DEFAULT


 DEL RIO LF VERTICAL EXPAN
 Chemical simulated is DEFAULT CHEMICAL


 Option Chosen                        Saturated and unsaturated zone models
 Run was                              DETERMIN
 Infiltration input by user
 Run was transient
 Reject runs if Y coordinate outside plume
 Reject runs if Z coordinate outside plume
 Gaussian source used in saturated zone model
1
1
 UNSATURATED ZONE FLOW MODEL PARAMETERS
 (input parameter description and value)
 NP      - Total number of nodal points                240
 NMAT    - Number of different porous materials          1
 KPROP   - Van Genuchten or Brooks and Corey             1
 IMSHGN  - Spatial discretization option                 1
 NVFLAYR - Number of layers in flow model                1


 OPTIONS CHOSEN
 ------- ------
 Van Genuchten functional coefficients
 User defined coordinate system
1
```

```
Layer information
-----------------
LAYER NO.    LAYER THICKNESS     MATERIAL PROPERTY
---------    ---------------     -----------------
    1                 23.80             1


                                                DATA FOR MATERIAL  1
                                                ---- --- --------
                                            VADOSE ZONE MATERIAL VARIABLES


          ----------------------------------------------------------------------------------------------------------------
-
                     VARIABLE NAME                UNITS      DISTRIBUTION          PARAMETERS              LIMITS
                                                                                  MEAN     STD DEV      MIN         MAX
          ----------------------------------------------------------------------------------------------------------------
-
          Saturated hydraulic conductivity          cm/hr       CONSTANT        0.720E-03 -999.       0.100E-10  0.100E+05
          Unsaturated zone porosity                 --          CONSTANT        0.200E-01 -999.       0.100E-08  0.990
          Air entry pressure head                   m           CONSTANT        0.000     -999.       0.000      -999.
          Depth of the unsaturated zone             m           CONSTANT         23.8     -999.       0.100E-08  -999.


                                                DATA FOR MATERIAL  1
                                                ---- --- --------
                                            VADOSE ZONE FUNCTION VARIABLES


          ----------------------------------------------------------------------------------------------------------------
-
                     VARIABLE NAME                UNITS      DISTRIBUTION          PARAMETERS              LIMITS
                                                                                  MEAN     STD DEV      MIN         MAX
          ----------------------------------------------------------------------------------------------------------------
-
          Residual water content                    --          CONSTANT        0.680E-01 -999.       0.100E-08   1.00
          Brook and Corey exponent,EN               --          CONSTANT        0.000     -999.       0.000       10.0
          ALFA coefficient                         1/cm         CONSTANT        0.800E-02 -999.       0.000       1.00
          Van Genuchten exponent, ENN               --          CONSTANT         1.09     -999.        1.00       5.00
1

 UNSATURATED ZONE TRANSPORT MODEL PARAMETERS

 Currently Not Used in Multimed  Version 2.0             1
```

```
NTSTPS - Number of time values concentration calc       20
DUMMY  - Not presently used                              1
ISOL   - Type of scheme used in unsaturated zone         1
N      - Stehfest terms or number of increments         18
NTEL   - Points in Lagrangian interpolation              3
NGPTS  - Number of Gauss points                        104
NIT    - Convolution integral segments                   2
IBOUND - Type of boundary condition                      2
ITSGEN - Time values generated or input                  1
TMAX   - Max simulation time             --            0.0
WTFUN  - Weighting factor                --            1.2
Used only for Numerical Model            --            0.0
Used only for Numerical Model            --            0.0
Used only for Numerical Model            --            0.0
Used only for Numerical Model            --            0.0
Used only for Numerical Model            --            0.0


OPTIONS CHOSEN
------- ------
Analytical unsaturated zone model
Stehfest numerical inversion algorithm
Nondecaying pulse source
Computer generated times for computing concentrations
1


                                                DATA FOR MATERIAL  1
                                                ---- --- --------
                                                VADOSE TRANSPORT VARIABLES


          ----------------------------------------------------------------------------------------------------------------
-
                     VARIABLE NAME                UNITS      DISTRIBUTION          PARAMETERS              LIMITS
                                                                                   MEAN     STD DEV      MIN         MAX
          ----------------------------------------------------------------------------------------------------------------
-
          Longitudinal dispersivity of material      m          DERIVED         -999.     -999.       0.100E-02  0.100E+05
          Percent organic matter                    --          CONSTANT         1.34     -999.       0.000       100.
          Bulk density of soil for material         g/cc        CONSTANT         1.30     -999.       0.100E-01   5.00
          Biological decay coefficient            1/yr          CONSTANT        0.000     -999.       0.000      -999.
          Parameter not used by the Analytical Model            CONSTANT        0.000     0.000       0.000      0.000
          Parameter not used by the Analytical Model            CONSTANT        0.000     0.000       0.000      0.000
1
```

CHEMICAL SPECIFIC VARIABLES

VARIABLE NAME	UNITS	DISTRIBUTION	PARAMETERS MEAN	PARAMETERS STD DEV	LIMITS MIN	LIMITS MAX
Solid phase decay coefficient	1/yr	CONSTANT	0.000	-999.	0.000	0.100E+11
Dissolved phase decay coefficient	1/yr	CONSTANT	0.000	-999.	0.000	0.100E+11
Overall chemical decay coefficient	1/yr	CONSTANT	0.000	-999.	0.000	0.100E+11
Acid catalyzed hydrolysis rate	l/M-yr	CONSTANT	0.000	-999.	0.000	-999.
Neutral hydrolysis rate constant	1/yr	CONSTANT	0.000	-999.	0.000	-999.
Base catalyzed hydrolysis rate	l/M-yr	CONSTANT	0.000	-999.	0.000	-999.
Reference temperature	C	CONSTANT	25.0	-999.	0.000	100.
Normalized distribution coefficient	ml/g	CONSTANT	0.000	-999.	0.000	-999.
Distribution coefficient	--	DERIVED	-999.	-999.	0.000	0.100E+11
Biodegradation coefficient (sat. zone)	1/yr	CONSTANT	0.000	-999.	0.000	-999.
Air diffusion coefficient	cm2/s	CONSTANT	0.000	-999.	0.000	10.0
Reference temperature for air diffusion	C	CONSTANT	0.000	-999.	0.000	100.
Molecular weight	g/M	CONSTANT	0.000	-999.	0.000	-999.
Mole fraction of solute	--	CONSTANT	0.000	-999.	0.100E-08	1.00
Vapor pressure of solute	mm Hg	CONSTANT	0.000	-999.	0.000	100.
Henry`s law constant	atm-m^3/M	CONSTANT	0.000	-999.	0.100E-09	1.00
Overall 1st order decay sat. zone	1/yr	DERIVED	0.000	0.000	0.000	1.00
Soil/Air Boundary Layer Thickness	cm	CONSTANT	-999.	-999.	0.000	-999.
Not currently used		CONSTANT	-999.	-999.	0.000	1.00

SOURCE SPECIFIC VARIABLES

VARIABLE NAME	UNITS	DISTRIBUTION	PARAMETERS MEAN	PARAMETERS STD DEV	LIMITS MIN	LIMITS MAX
Infiltration rate	m/yr	CONSTANT	0.170E-03	-999.	0.100E-09	0.100E+11
Area of waste disposal unit	m^2	CONSTANT	0.320E+06	-999.	0.100E-01	-999.
Duration of pulse	yr	CONSTANT	0.100E+05	-999.	0.100E-08	-999.
Spread of contaminant source	m	DERIVED	-999.	-999.	0.100E-08	0.100E+11
Recharge rate	m/yr	CONSTANT	0.282E-01	-999.	0.000	0.100E+11
Source decay constant	1/yr	CONSTANT	0.000	-999.	0.000	-999.
Initial concentration at landfill	mg/l	CONSTANT	1.00	-999.	0.000	-999.

Length scale of facility	m	DERIVED	-999.	-999.	0.100E-08	0.100E+11
Width scale of facility	m	DERIVED	-999.	-999.	0.100E-08	0.100E+11
Near field dilution		DERIVED	1.00	0.000	0.000	1.00

1

AQUIFER SPECIFIC VARIABLES

-

VARIABLE NAME	UNITS	DISTRIBUTION	PARAMETERS		LIMITS	
			MEAN	STD DEV	MIN	MAX
Particle diameter	cm	CONSTANT	0.25E-01	-999.	0.100E-08	100.
Aquifer porosity	--	CONSTANT	0.100	-999.	0.100E-08	0.990
Bulk density	g/cc	CONSTANT	2.40	-999.	0.100E-01	5.00
Aquifer thickness	m	CONSTANT	91.4	-999.	0.100E-08	0.100E+06
Source thickness (mixing zone depth)	m	DERIVED	-999.	-999.	0.100E-08	0.100E+06
Conductivity (hydraulic)	m/yr	CONSTANT	50.0	-999.	0.100E-06	0.100E+09
Gradient (hydraulic)		CONSTANT	0.110E-01	-999.	0.100E-07	-999.
Groundwater seepage velocity	m/yr	DERIVED	-999.	-999.	0.100E-09	0.100E+09
Retardation coefficient	--	DERIVED	-999.	-999.	1.00	0.100E+09
Longitudinal dispersivity	m	FUNCTION OF X	-999.	-999.	-999.	-999.
Transverse dispersivity	m	FUNCTION OF X	-999.	-999.	-999.	-999.
Vertical dispersivity	m	FUNCTION OF X	-999.	-999.	-999.	-999.
Temperature of aquifer	C	CONSTANT	25.0	-999.	0.000	100.
pH	--	CONSTANT	7.20	-999.	0.300	14.0
Organic carbon content (fraction)		CONSTANT	0.300E-02	-999.	0.100E-05	1.00
Well distance from site	m	CONSTANT	1.00	-999.	1.00	-999.
Angle off center	degree	CONSTANT	0.000	-999.	0.000	360.
Well vertical distance	m	CONSTANT	0.000	-999.	0.000	1.00

1

TIME	CONCENTRATION
0.100E+02	0.00000E+00
0.200E+02	0.00000E+00
0.300E+02	0.00000E+00
0.400E+02	0.00000E+00
0.500E+02	0.00000E+00
0.600E+02	0.00000E+00
0.700E+02	0.00000E+00
0.800E+02	0.00000E+00
0.900E+02	0.00000E+00

0.100E+03	0.00000E+00
0.150E+03	0.00000E+00
0.200E+03	0.00000E+00
0.250E+03	0.00000E+00
0.300E+03	0.00000E+00
0.350E+03	0.00000E+00
0.400E+03	0.00000E+00
0.450E+03	0.00000E+00
0.500E+03	0.00000E+00
0.550E+03	0.00000E+00
0.600E+03	0.00000E+00
0.650E+03	0.00000E+00
0.700E+03	0.00000E+00
0.750E+03	0.00000E+00
0.800E+03	0.00000E+00
0.850E+03	0.00000E+00
0.900E+03	0.00000E+00
0.950E+03	0.00000E+00
0.100E+04	0.00000E+00
0.105E+04	0.00000E+00
0.110E+04	0.00000E+00
0.115E+04	0.00000E+00
0.120E+04	0.00000E+00
0.125E+04	0.00000E+00
0.130E+04	0.00000E+00
0.135E+04	0.00000E+00
0.140E+04	0.00000E+00
0.145E+04	0.00000E+00
0.150E+04	0.00000E+00
0.155E+04	0.00000E+00
0.160E+04	0.00000E+00
0.165E+04	0.00000E+00
0.170E+04	0.00000E+00
0.175E+04	0.00000E+00
0.180E+04	0.00000E+00
0.185E+04	0.00000E+00
0.190E+04	0.42573E-04
0.195E+04	0.11836E-03
0.200E+04	0.19414E-03
0.205E+04	0.26993E-03
0.210E+04	0.34571E-03
0.215E+04	0.42150E-03
0.220E+04	0.49728E-03
0.225E+04	0.57306E-03
0.230E+04	0.64885E-03

0.235E+04	0.72463E-03
0.240E+04	0.82969E-03
0.245E+04	0.10095E-02
0.250E+04	0.11892E-02
0.255E+04	0.13690E-02
0.260E+04	0.15487E-02
0.265E+04	0.17285E-02
0.270E+04	0.19083E-02
0.275E+04	0.20880E-02
0.280E+04	0.22678E-02
0.285E+04	0.24623E-02
0.290E+04	0.26629E-02
0.295E+04	0.28635E-02
0.300E+04	0.30642E-02
0.305E+04	0.32648E-02
0.310E+04	0.34654E-02
0.315E+04	0.36660E-02
0.320E+04	0.38261E-02
0.325E+04	0.39551E-02
0.400E+04	0.58906E-02
0.500E+04	0.68450E-02
0.600E+04	0.69634E-02
0.700E+04	0.69353E-02
0.800E+04	0.69230E-02
0.900E+04	0.69287E-02
0.100E+05	0.69384E-02

```
1
                    U. S.   E N V I R O N M E N T A L   P R O T E C T I O N   A G E N C Y

                                E X P O S U R E   A S S E S S M E N T

                                  M U L T I M E D I A   M O D E L

                              MULTIMED - (Version 2.00 Beta - October 1996)
1
 Run options
 --- -------



 DEFAULT


 DEL RIO LF VERTICAL EXPAN
 Chemical simulated is DEFAULT CHEMICAL


 Option Chosen                        Saturated and unsaturated zone models
 Run was                              DETERMIN
 Infiltration input by user
 Run was transient
 Reject runs if Y coordinate outside plume
 Reject runs if Z coordinate outside plume
 Gaussian source used in saturated zone model
1
1
 UNSATURATED ZONE FLOW MODEL PARAMETERS
 (input parameter description and value)
 NP      - Total number of nodal points                240
 NMAT    - Number of different porous materials          1
 KPROP   - Van Genuchten or Brooks and Corey             1
 IMSHGN  - Spatial discretization option                 1
 NVFLAYR - Number of layers in flow model                1


 OPTIONS CHOSEN
 ------- ------
 Van Genuchten functional coefficients
 User defined coordinate system
1
```

```
Layer information
-----------------
LAYER NO.    LAYER THICKNESS     MATERIAL PROPERTY
---------    ---------------     -----------------
    1                 23.80             1


                                                DATA FOR MATERIAL  1
                                                ---- --- --------
                                            VADOSE ZONE MATERIAL VARIABLES


          ----------------------------------------------------------------------------------------------------------------
-
                     VARIABLE NAME                UNITS      DISTRIBUTION          PARAMETERS              LIMITS
                                                                                  MEAN     STD DEV      MIN         MAX
          ----------------------------------------------------------------------------------------------------------------
-
          Saturated hydraulic conductivity          cm/hr       CONSTANT        0.720E-03 -999.       0.100E-10  0.100E+05
          Unsaturated zone porosity                 --          CONSTANT        0.200E-01 -999.       0.100E-08  0.990
          Air entry pressure head                   m           CONSTANT        0.000     -999.       0.000      -999.
          Depth of the unsaturated zone             m           CONSTANT         23.8     -999.       0.100E-08  -999.


                                                DATA FOR MATERIAL  1
                                                ---- --- --------
                                            VADOSE ZONE FUNCTION VARIABLES


          ----------------------------------------------------------------------------------------------------------------
-
                     VARIABLE NAME                UNITS      DISTRIBUTION          PARAMETERS              LIMITS
                                                                                  MEAN     STD DEV      MIN         MAX
          ----------------------------------------------------------------------------------------------------------------
-
          Residual water content                    --          CONSTANT        0.680E-01 -999.       0.100E-08   1.00
          Brook and Corey exponent,EN               --          CONSTANT        0.000     -999.       0.000       10.0
          ALFA coefficient                         1/cm         CONSTANT        0.800E-02 -999.       0.000       1.00
          Van Genuchten exponent, ENN               --          CONSTANT         1.09     -999.        1.00       5.00
1

 UNSATURATED ZONE TRANSPORT MODEL PARAMETERS

 Currently Not Used in Multimed  Version 2.0             1
```

```
NTSTPS - Number of time values concentration calc       20
DUMMY  - Not presently used                              1
ISOL   - Type of scheme used in unsaturated zone         1
N      - Stehfest terms or number of increments         18
NTEL   - Points in Lagrangian interpolation              3
NGPTS  - Number of Gauss points                        104
NIT    - Convolution integral segments                   2
IBOUND - Type of boundary condition                      2
ITSGEN - Time values generated or input                  1
TMAX   - Max simulation time             --            0.0
WTFUN  - Weighting factor                --            1.2
Used only for Numerical Model            --            0.0
Used only for Numerical Model            --            0.0
Used only for Numerical Model            --            0.0
Used only for Numerical Model            --            0.0
Used only for Numerical Model            --            0.0


OPTIONS CHOSEN
------- ------
Analytical unsaturated zone model
Stehfest numerical inversion algorithm
Nondecaying pulse source
Computer generated times for computing concentrations
1


                                                DATA FOR MATERIAL  1
                                                ---- --- --------
                                                VADOSE TRANSPORT VARIABLES


          ---------------------------------------------------------------------------------------------------------------
-
                     VARIABLE NAME                UNITS      DISTRIBUTION          PARAMETERS              LIMITS
                                                                                  MEAN     STD DEV      MIN         MAX
          ---------------------------------------------------------------------------------------------------------------
-
          Longitudinal dispersivity of material      m          DERIVED         -999.     -999.       0.100E-02  0.100E+05
          Percent organic matter                    --          CONSTANT         1.34     -999.       0.000       100.
          Bulk density of soil for material         g/cc        CONSTANT         1.30     -999.       0.100E-01   5.00
          Biological decay coefficient            1/yr          CONSTANT        0.000     -999.       0.000      -999.
          Parameter not used by the Analytical Model            CONSTANT        0.000     0.000       0.000      0.000
          Parameter not used by the Analytical Model            CONSTANT        0.000     0.000       0.000      0.000
1
```

CHEMICAL SPECIFIC VARIABLES

VARIABLE NAME	UNITS	DISTRIBUTION	PARAMETERS MEAN	PARAMETERS STD DEV	LIMITS MIN	LIMITS MAX
Solid phase decay coefficient	1/yr	CONSTANT	0.000	-999.	0.000	0.100E+11
Dissolved phase decay coefficient	1/yr	CONSTANT	0.000	-999.	0.000	0.100E+11
Overall chemical decay coefficient	1/yr	CONSTANT	0.000	-999.	0.000	0.100E+11
Acid catalyzed hydrolysis rate	l/M-yr	CONSTANT	0.000	-999.	0.000	-999.
Neutral hydrolysis rate constant	1/yr	CONSTANT	0.000	-999.	0.000	-999.
Base catalyzed hydrolysis rate	l/M-yr	CONSTANT	0.000	-999.	0.000	-999.
Reference temperature	C	CONSTANT	25.0	-999.	0.000	100.
Normalized distribution coefficient	ml/g	CONSTANT	0.000	-999.	0.000	-999.
Distribution coefficient	--	DERIVED	-999.	-999.	0.000	0.100E+11
Biodegradation coefficient (sat. zone)	1/yr	CONSTANT	0.000	-999.	0.000	-999.
Air diffusion coefficient	cm2/s	CONSTANT	0.000	-999.	0.000	10.0
Reference temperature for air diffusion	C	CONSTANT	0.000	-999.	0.000	100.
Molecular weight	g/M	CONSTANT	0.000	-999.	0.000	-999.
Mole fraction of solute	--	CONSTANT	0.000	-999.	0.100E-08	1.00
Vapor pressure of solute	mm Hg	CONSTANT	0.000	-999.	0.000	100.
Henry`s law constant	atm-m^3/M	CONSTANT	0.000	-999.	0.100E-09	1.00
Overall 1st order decay sat. zone	1/yr	DERIVED	0.000	0.000	0.000	1.00
Soil/Air Boundary Layer Thickness	cm	CONSTANT	-999.	-999.	0.000	-999.
Not currently used		CONSTANT	-999.	-999.	0.000	1.00

SOURCE SPECIFIC VARIABLES

VARIABLE NAME	UNITS	DISTRIBUTION	PARAMETERS MEAN	PARAMETERS STD DEV	LIMITS MIN	LIMITS MAX
Infiltration rate	m/yr	CONSTANT	0.170E-03	-999.	0.100E-09	0.100E+11
Area of waste disposal unit	m^2	CONSTANT	0.320E+06	-999.	0.100E-01	-999.
Duration of pulse	yr	CONSTANT	0.100E+05	-999.	0.100E-08	-999.
Spread of contaminant source	m	DERIVED	-999.	-999.	0.100E-08	0.100E+11
Recharge rate	m/yr	CONSTANT	0.282E-01	-999.	0.000	0.100E+11
Source decay constant	1/yr	CONSTANT	0.000	-999.	0.000	-999.
Initial concentration at landfill	mg/l	CONSTANT	1.00	-999.	0.000	-999.

Length scale of facility	m	DERIVED	-999.	-999.	0.100E-08	0.100E+11
Width scale of facility	m	DERIVED	-999.	-999.	0.100E-08	0.100E+11
Near field dilution		DERIVED	1.00	0.000	0.000	1.00

1

AQUIFER SPECIFIC VARIABLES

VARIABLE NAME	UNITS	DISTRIBUTION	PARAMETERS MEAN	PARAMETERS STD DEV	LIMITS MIN	LIMITS MAX
Particle diameter	cm	CONSTANT	0.25E-01	-999.	0.100E-08	100.
Aquifer porosity	--	CONSTANT	0.100	-999.	0.100E-08	0.990
Bulk density	g/cc	CONSTANT	2.40	-999.	0.100E-01	5.00
Aquifer thickness	m	CONSTANT	91.4	-999.	0.100E-08	0.100E+06
Source thickness (mixing zone depth)	m	DERIVED	-999.	-999.	0.100E-08	0.100E+06
Conductivity (hydraulic)	m/yr	CONSTANT	25.0	-999.	0.100E-06	0.100E+09
Gradient (hydraulic)		CONSTANT	0.110E-01	-999.	0.100E-07	-999.
Groundwater seepage velocity	m/yr	DERIVED	-999.	-999.	0.100E-09	0.100E+09
Retardation coefficient	--	DERIVED	-999.	-999.	1.00	0.100E+09
Longitudinal dispersivity	m	FUNCTION OF X	-999.	-999.	-999.	-999.
Transverse dispersivity	m	FUNCTION OF X	-999.	-999.	-999.	-999.
Vertical dispersivity	m	FUNCTION OF X	-999.	-999.	-999.	-999.
Temperature of aquifer	C	CONSTANT	25.0	-999.	0.000	100.
pH	--	CONSTANT	7.20	-999.	0.300	14.0
Organic carbon content (fraction)		CONSTANT	0.300E-02	-999.	0.100E-05	1.00
Well distance from site	m	CONSTANT	1.00	-999.	1.00	-999.
Angle off center	degree	CONSTANT	0.000	-999.	0.000	360.
Well vertical distance	m	CONSTANT	0.000	-999.	0.000	1.00

1

TIME	CONCENTRATION
0.100E+02	0.00000E+00
0.200E+02	0.00000E+00
0.300E+02	0.00000E+00
0.400E+02	0.00000E+00
0.500E+02	0.00000E+00
0.600E+02	0.00000E+00
0.700E+02	0.00000E+00
0.800E+02	0.00000E+00
0.900E+02	0.00000E+00

0.100E+03	0.00000E+00
0.150E+03	0.00000E+00
0.200E+03	0.00000E+00
0.250E+03	0.00000E+00
0.300E+03	0.00000E+00
0.350E+03	0.00000E+00
0.400E+03	0.00000E+00
0.450E+03	0.00000E+00
0.500E+03	0.00000E+00
0.550E+03	0.00000E+00
0.600E+03	0.00000E+00
0.650E+03	0.00000E+00
0.700E+03	0.00000E+00
0.750E+03	0.00000E+00
0.800E+03	0.00000E+00
0.850E+03	0.00000E+00
0.900E+03	0.00000E+00
0.950E+03	0.00000E+00
0.100E+04	0.00000E+00
0.105E+04	0.00000E+00
0.110E+04	0.00000E+00
0.115E+04	0.00000E+00
0.120E+04	0.00000E+00
0.125E+04	0.00000E+00
0.130E+04	0.00000E+00
0.135E+04	0.00000E+00
0.140E+04	0.00000E+00
0.145E+04	0.00000E+00
0.150E+04	0.00000E+00
0.155E+04	0.00000E+00
0.160E+04	0.00000E+00
0.165E+04	0.00000E+00
0.170E+04	0.00000E+00
0.175E+04	0.00000E+00
0.180E+04	0.00000E+00
0.185E+04	0.00000E+00
0.190E+04	0.62326E-04
0.195E+04	0.17327E-03
0.200E+04	0.28422E-03
0.205E+04	0.39517E-03
0.210E+04	0.50612E-03
0.215E+04	0.61706E-03
0.220E+04	0.72801E-03
0.225E+04	0.83896E-03
0.230E+04	0.94991E-03

0.235E+04	0.10609E-02
0.240E+04	0.12147E-02
0.245E+04	0.14778E-02
0.250E+04	0.17410E-02
0.255E+04	0.20042E-02
0.260E+04	0.22673E-02
0.265E+04	0.25305E-02
0.270E+04	0.27937E-02
0.275E+04	0.30569E-02
0.280E+04	0.33200E-02
0.285E+04	0.36048E-02
0.290E+04	0.38985E-02
0.295E+04	0.41922E-02
0.300E+04	0.44859E-02
0.305E+04	0.47796E-02
0.310E+04	0.50732E-02
0.315E+04	0.53669E-02
0.320E+04	0.56014E-02
0.325E+04	0.57903E-02
0.400E+04	0.86237E-02
0.500E+04	0.10021E-01
0.600E+04	0.10194E-01
0.700E+04	0.10153E-01
0.800E+04	0.10135E-01
0.900E+04	0.10144E-01
0.100E+05	0.10158E-01

```
1
                    U. S.   E N V I R O N M E N T A L   P R O T E C T I O N   A G E N C Y

                                E X P O S U R E   A S S E S S M E N T

                                  M U L T I M E D I A   M O D E L

                              MULTIMED - (Version 2.00 Beta - October 1996)
1
 Run options
 --- -------



 DEFAULT


 DEL RIO LF VERTICAL EXPAN
 Chemical simulated is DEFAULT CHEMICAL


 Option Chosen                        Saturated and unsaturated zone models
 Run was                              DETERMIN
 Infiltration input by user
 Run was transient
 Reject runs if Y coordinate outside plume
 Reject runs if Z coordinate outside plume
 Gaussian source used in saturated zone model
1
1
 UNSATURATED ZONE FLOW MODEL PARAMETERS
 (input parameter description and value)
 NP      - Total number of nodal points                240
 NMAT    - Number of different porous materials          1
 KPROP   - Van Genuchten or Brooks and Corey             1
 IMSHGN  - Spatial discretization option                 1
 NVFLAYR - Number of layers in flow model                1


 OPTIONS CHOSEN
 ------- ------
 Van Genuchten functional coefficients
 User defined coordinate system
1
```

```
Layer information
-----------------
LAYER NO.    LAYER THICKNESS     MATERIAL PROPERTY
---------    ---------------     -----------------
    1                 23.80             1


                                                DATA FOR MATERIAL  1
                                                ---- --- --------
                                            VADOSE ZONE MATERIAL VARIABLES


          ---------------------------------------------------------------------------------------------------------------
-
                     VARIABLE NAME                UNITS      DISTRIBUTION          PARAMETERS              LIMITS
                                                                                  MEAN     STD DEV      MIN         MAX
          ---------------------------------------------------------------------------------------------------------------
-
          Saturated hydraulic conductivity          cm/hr       CONSTANT        0.720E-03 -999.       0.100E-10  0.100E+05
          Unsaturated zone porosity                 --          CONSTANT        0.200E-01 -999.       0.100E-08  0.990
          Air entry pressure head                   m           CONSTANT        0.000     -999.       0.000      -999.
          Depth of the unsaturated zone             m           CONSTANT         23.8     -999.       0.100E-08  -999.


                                                DATA FOR MATERIAL  1
                                                ---- --- --------
                                            VADOSE ZONE FUNCTION VARIABLES


          ---------------------------------------------------------------------------------------------------------------
-
                     VARIABLE NAME                UNITS      DISTRIBUTION          PARAMETERS              LIMITS
                                                                                  MEAN     STD DEV      MIN         MAX
          ---------------------------------------------------------------------------------------------------------------
-
          Residual water content                    --          CONSTANT        0.680E-01 -999.       0.100E-08   1.00
          Brook and Corey exponent,EN               --          CONSTANT        0.000     -999.       0.000       10.0
          ALFA coefficient                         1/cm         CONSTANT        0.800E-02 -999.       0.000       1.00
          Van Genuchten exponent, ENN               --          CONSTANT         1.09     -999.        1.00       5.00
1

 UNSATURATED ZONE TRANSPORT MODEL PARAMETERS

 Currently Not Used in Multimed  Version 2.0             1
```

```
NTSTPS - Number of time values concentration calc       20
DUMMY  - Not presently used                              1
ISOL   - Type of scheme used in unsaturated zone         1
N      - Stehfest terms or number of increments         18
NTEL   - Points in Lagrangian interpolation              3
NGPTS  - Number of Gauss points                        104
NIT    - Convolution integral segments                   2
IBOUND - Type of boundary condition                      2
ITSGEN - Time values generated or input                  1
TMAX   - Max simulation time             --            0.0
WTFUN  - Weighting factor                --            1.2
Used only for Numerical Model            --            0.0
Used only for Numerical Model            --            0.0
Used only for Numerical Model            --            0.0
Used only for Numerical Model            --            0.0
Used only for Numerical Model            --            0.0


OPTIONS CHOSEN
------- ------
Analytical unsaturated zone model
Stehfest numerical inversion algorithm
Nondecaying pulse source
Computer generated times for computing concentrations
1


                                                DATA FOR MATERIAL  1
                                                ---- --- --------
                                                VADOSE TRANSPORT VARIABLES


          ---------------------------------------------------------------------------------------------------------------
-
                     VARIABLE NAME                UNITS      DISTRIBUTION          PARAMETERS              LIMITS
                                                                                  MEAN     STD DEV      MIN         MAX
          ---------------------------------------------------------------------------------------------------------------
-
          Longitudinal dispersivity of material      m          DERIVED         -999.     -999.       0.100E-02  0.100E+05
          Percent organic matter                    --          CONSTANT         1.34     -999.       0.000       100.
          Bulk density of soil for material         g/cc        CONSTANT         1.30     -999.       0.100E-01   5.00
          Biological decay coefficient            1/yr          CONSTANT        0.000     -999.       0.000      -999.
          Parameter not used by the Analytical Model            CONSTANT        0.000     0.000       0.000      0.000
          Parameter not used by the Analytical Model            CONSTANT        0.000     0.000       0.000      0.000
1
```

CHEMICAL SPECIFIC VARIABLES

VARIABLE NAME	UNITS	DISTRIBUTION	PARAMETERS MEAN	PARAMETERS STD DEV	LIMITS MIN	LIMITS MAX
Solid phase decay coefficient	1/yr	CONSTANT	0.000	-999.	0.000	0.100E+11
Dissolved phase decay coefficient	1/yr	CONSTANT	0.000	-999.	0.000	0.100E+11
Overall chemical decay coefficient	1/yr	CONSTANT	0.000	-999.	0.000	0.100E+11
Acid catalyzed hydrolysis rate	l/M-yr	CONSTANT	0.000	-999.	0.000	-999.
Neutral hydrolysis rate constant	1/yr	CONSTANT	0.000	-999.	0.000	-999.
Base catalyzed hydrolysis rate	l/M-yr	CONSTANT	0.000	-999.	0.000	-999.
Reference temperature	C	CONSTANT	25.0	-999.	0.000	100.
Normalized distribution coefficient	ml/g	CONSTANT	0.000	-999.	0.000	-999.
Distribution coefficient	--	DERIVED	-999.	-999.	0.000	0.100E+11
Biodegradation coefficient (sat. zone)	1/yr	CONSTANT	0.000	-999.	0.000	-999.
Air diffusion coefficient	cm2/s	CONSTANT	0.000	-999.	0.000	10.0
Reference temperature for air diffusion	C	CONSTANT	0.000	-999.	0.000	100.
Molecular weight	g/M	CONSTANT	0.000	-999.	0.000	-999.
Mole fraction of solute	--	CONSTANT	0.000	-999.	0.100E-08	1.00
Vapor pressure of solute	mm Hg	CONSTANT	0.000	-999.	0.000	100.
Henry`s law constant	atm-m^3/M	CONSTANT	0.000	-999.	0.100E-09	1.00
Overall 1st order decay sat. zone	1/yr	DERIVED	0.000	0.000	0.000	1.00
Soil/Air Boundary Layer Thickness	cm	CONSTANT	-999.	-999.	0.000	-999.
Not currently used		CONSTANT	-999.	-999.	0.000	1.00

SOURCE SPECIFIC VARIABLES

VARIABLE NAME	UNITS	DISTRIBUTION	PARAMETERS MEAN	PARAMETERS STD DEV	LIMITS MIN	LIMITS MAX
Infiltration rate	m/yr	CONSTANT	0.170E-03	-999.	0.100E-09	0.100E+11
Area of waste disposal unit	m^2	CONSTANT	0.320E+06	-999.	0.100E-01	-999.
Duration of pulse	yr	CONSTANT	0.100E+05	-999.	0.100E-08	-999.
Spread of contaminant source	m	DERIVED	-999.	-999.	0.100E-08	0.100E+11
Recharge rate	m/yr	CONSTANT	0.282E-01	-999.	0.000	0.100E+11
Source decay constant	1/yr	CONSTANT	0.000	-999.	0.000	-999.
Initial concentration at landfill	mg/l	CONSTANT	1.00	-999.	0.000	-999.

Length scale of facility	m	DERIVED	-999.	-999.	0.100E-08	0.100E+11
Width scale of facility	m	DERIVED	-999.	-999.	0.100E-08	0.100E+11
Near field dilution		DERIVED	1.00	0.000	0.000	1.00

1

AQUIFER SPECIFIC VARIABLES

-

VARIABLE NAME	UNITS	DISTRIBUTION	PARAMETERS		LIMITS	
			MEAN	STD DEV	MIN	MAX
Particle diameter	cm	CONSTANT	0.25E-01	-999.	0.100E-08	100.
Aquifer porosity	--	CONSTANT	0.100	-999.	0.100E-08	0.990
Bulk density	g/cc	CONSTANT	2.40	-999.	0.100E-01	5.00
Aquifer thickness	m	CONSTANT	91.4	-999.	0.100E-08	0.100E+06
Source thickness (mixing zone depth)	m	DERIVED	-999.	-999.	0.100E-08	0.100E+06
Conductivity (hydraulic)	m/yr	CONSTANT	75.0	-999.	0.100E-06	0.100E+09
Gradient (hydraulic)		CONSTANT	0.110E-01	-999.	0.100E-07	-999.
Groundwater seepage velocity	m/yr	DERIVED	-999.	-999.	0.100E-09	0.100E+09
Retardation coefficient	--	DERIVED	-999.	-999.	1.00	0.100E+09
Longitudinal dispersivity	m	FUNCTION OF X	-999.	-999.	-999.	-999.
Transverse dispersivity	m	FUNCTION OF X	-999.	-999.	-999.	-999.
Vertical dispersivity	m	FUNCTION OF X	-999.	-999.	-999.	-999.
Temperature of aquifer	C	CONSTANT	25.0	-999.	0.000	100.
pH	--	CONSTANT	7.20	-999.	0.300	14.0
Organic carbon content (fraction)		CONSTANT	0.300E-02	-999.	0.100E-05	1.00
Well distance from site	m	CONSTANT	1.00	-999.	1.00	-999.
Angle off center	degree	CONSTANT	0.000	-999.	0.000	360.
Well vertical distance	m	CONSTANT	0.000	-999.	0.000	1.00

1

TIME	CONCENTRATION
0.100E+02	0.00000E+00
0.200E+02	0.00000E+00
0.300E+02	0.00000E+00
0.400E+02	0.00000E+00
0.500E+02	0.00000E+00
0.600E+02	0.00000E+00
0.700E+02	0.00000E+00
0.800E+02	0.00000E+00
0.900E+02	0.00000E+00

0.100E+03	0.00000E+00
0.150E+03	0.00000E+00
0.200E+03	0.00000E+00
0.250E+03	0.00000E+00
0.300E+03	0.00000E+00
0.350E+03	0.00000E+00
0.400E+03	0.00000E+00
0.450E+03	0.00000E+00
0.500E+03	0.00000E+00
0.550E+03	0.00000E+00
0.600E+03	0.00000E+00
0.650E+03	0.00000E+00
0.700E+03	0.00000E+00
0.750E+03	0.00000E+00
0.800E+03	0.00000E+00
0.850E+03	0.00000E+00
0.900E+03	0.00000E+00
0.950E+03	0.00000E+00
0.100E+04	0.00000E+00
0.105E+04	0.00000E+00
0.110E+04	0.00000E+00
0.115E+04	0.00000E+00
0.120E+04	0.00000E+00
0.125E+04	0.00000E+00
0.130E+04	0.00000E+00
0.135E+04	0.00000E+00
0.140E+04	0.00000E+00
0.145E+04	0.00000E+00
0.150E+04	0.00000E+00
0.155E+04	0.00000E+00
0.160E+04	0.00000E+00
0.165E+04	0.00000E+00
0.170E+04	0.00000E+00
0.175E+04	0.00000E+00
0.180E+04	0.00000E+00
0.185E+04	0.00000E+00
0.190E+04	0.28418E-04
0.195E+04	0.79004E-04
0.200E+04	0.12959E-03
0.205E+04	0.18018E-03
0.210E+04	0.23076E-03
0.215E+04	0.28135E-03
0.220E+04	0.33194E-03
0.225E+04	0.38252E-03
0.230E+04	0.43311E-03

0.235E+04	0.48369E-03
0.240E+04	0.55382E-03
0.245E+04	0.67382E-03
0.250E+04	0.79381E-03
0.255E+04	0.91380E-03
0.260E+04	0.10338E-02
0.265E+04	0.11538E-02
0.270E+04	0.12738E-02
0.275E+04	0.13938E-02
0.280E+04	0.15138E-02
0.285E+04	0.16436E-02
0.290E+04	0.17775E-02
0.295E+04	0.19114E-02
0.300E+04	0.20453E-02
0.305E+04	0.21792E-02
0.310E+04	0.23131E-02
0.315E+04	0.24470E-02
0.320E+04	0.25539E-02
0.325E+04	0.26401E-02
0.400E+04	0.39320E-02
0.500E+04	0.45690E-02
0.600E+04	0.46481E-02
0.700E+04	0.46293E-02
0.800E+04	0.46211E-02
0.900E+04	0.46249E-02
0.100E+05	0.46314E-02

```
1
                    U. S.   E N V I R O N M E N T A L   P R O T E C T I O N   A G E N C Y

                                E X P O S U R E   A S S E S S M E N T

                                  M U L T I M E D I A   M O D E L

                              MULTIMED - (Version 2.00 Beta - October 1996)
1
 Run options
 --- -------



 DEFAULT


 DEL RIO LF VERTICAL EXPAN
 Chemical simulated is DEFAULT CHEMICAL


 Option Chosen                        Saturated and unsaturated zone models
 Run was                              DETERMIN
 Infiltration input by user
 Run was transient
 Reject runs if Y coordinate outside plume
 Reject runs if Z coordinate outside plume
 Gaussian source used in saturated zone model
1
1
 UNSATURATED ZONE FLOW MODEL PARAMETERS
 (input parameter description and value)
 NP      - Total number of nodal points                240
 NMAT    - Number of different porous materials          1
 KPROP   - Van Genuchten or Brooks and Corey             1
 IMSHGN  - Spatial discretization option                 1
 NVFLAYR - Number of layers in flow model                1


 OPTIONS CHOSEN
 ------- ------
 Van Genuchten functional coefficients
 User defined coordinate system
1
```

```
Layer information
-----------------
LAYER NO.    LAYER THICKNESS     MATERIAL PROPERTY
---------    ---------------     -----------------
    1                 23.80             1


                                                DATA FOR MATERIAL  1
                                                ---- --- --------
                                            VADOSE ZONE MATERIAL VARIABLES


          ----------------------------------------------------------------------------------------------------------------
-
                     VARIABLE NAME                UNITS      DISTRIBUTION          PARAMETERS              LIMITS
                                                                                  MEAN     STD DEV      MIN         MAX
          ----------------------------------------------------------------------------------------------------------------
-
          Saturated hydraulic conductivity          cm/hr       CONSTANT        0.720E-03 -999.       0.100E-10  0.100E+05
          Unsaturated zone porosity                 --          CONSTANT        0.200E-01 -999.       0.100E-08  0.990
          Air entry pressure head                   m           CONSTANT        0.000     -999.       0.000      -999.
          Depth of the unsaturated zone             m           CONSTANT         23.8     -999.       0.100E-08  -999.


                                                DATA FOR MATERIAL  1
                                                ---- --- --------
                                            VADOSE ZONE FUNCTION VARIABLES


          ----------------------------------------------------------------------------------------------------------------
-
                     VARIABLE NAME                UNITS      DISTRIBUTION          PARAMETERS              LIMITS
                                                                                  MEAN     STD DEV      MIN         MAX
          ----------------------------------------------------------------------------------------------------------------
-
          Residual water content                    --          CONSTANT        0.680E-01 -999.       0.100E-08   1.00
          Brook and Corey exponent,EN               --          CONSTANT        0.000     -999.       0.000       10.0
          ALFA coefficient                         1/cm         CONSTANT        0.800E-02 -999.       0.000       1.00
          Van Genuchten exponent, ENN               --          CONSTANT         1.09     -999.        1.00       5.00
1

 UNSATURATED ZONE TRANSPORT MODEL PARAMETERS

 Currently Not Used in Multimed  Version 2.0             1
```

```
NTSTPS - Number of time values concentration calc       20
DUMMY  - Not presently used                              1
ISOL   - Type of scheme used in unsaturated zone         1
N      - Stehfest terms or number of increments         18
NTEL   - Points in Lagrangian interpolation              3
NGPTS  - Number of Gauss points                        104
NIT    - Convolution integral segments                   2
IBOUND - Type of boundary condition                      2
ITSGEN - Time values generated or input                  1
TMAX   - Max simulation time             --            0.0
WTFUN  - Weighting factor                --            1.2
Used only for Numerical Model            --            0.0
Used only for Numerical Model            --            0.0
Used only for Numerical Model            --            0.0
Used only for Numerical Model            --            0.0
Used only for Numerical Model            --            0.0


OPTIONS CHOSEN
------- ------
Analytical unsaturated zone model
Stehfest numerical inversion algorithm
Nondecaying pulse source
Computer generated times for computing concentrations
1


                                                DATA FOR MATERIAL  1
                                                ---- --- --------
                                                VADOSE TRANSPORT VARIABLES


          ---------------------------------------------------------------------------------------------------------------
-
                     VARIABLE NAME                UNITS      DISTRIBUTION          PARAMETERS              LIMITS
                                                                                  MEAN     STD DEV      MIN         MAX
          ---------------------------------------------------------------------------------------------------------------
-
          Longitudinal dispersivity of material      m          DERIVED         -999.     -999.       0.100E-02  0.100E+05
          Percent organic matter                    --          CONSTANT         1.34     -999.       0.000       100.
          Bulk density of soil for material         g/cc        CONSTANT         1.30     -999.       0.100E-01   5.00
          Biological decay coefficient            1/yr          CONSTANT        0.000     -999.       0.000      -999.
          Parameter not used by the Analytical Model            CONSTANT        0.000     0.000       0.000      0.000
          Parameter not used by the Analytical Model            CONSTANT        0.000     0.000       0.000      0.000
1
```

CHEMICAL SPECIFIC VARIABLES

VARIABLE NAME	UNITS	DISTRIBUTION	PARAMETERS MEAN	PARAMETERS STD DEV	LIMITS MIN	LIMITS MAX
Solid phase decay coefficient	1/yr	CONSTANT	0.000	-999.	0.000	0.100E+11
Dissolved phase decay coefficient	1/yr	CONSTANT	0.000	-999.	0.000	0.100E+11
Overall chemical decay coefficient	1/yr	CONSTANT	0.000	-999.	0.000	0.100E+11
Acid catalyzed hydrolysis rate	l/M-yr	CONSTANT	0.000	-999.	0.000	-999.
Neutral hydrolysis rate constant	1/yr	CONSTANT	0.000	-999.	0.000	-999.
Base catalyzed hydrolysis rate	l/M-yr	CONSTANT	0.000	-999.	0.000	-999.
Reference temperature	C	CONSTANT	25.0	-999.	0.000	100.
Normalized distribution coefficient	ml/g	CONSTANT	0.000	-999.	0.000	-999.
Distribution coefficient	--	DERIVED	-999.	-999.	0.000	0.100E+11
Biodegradation coefficient (sat. zone)	1/yr	CONSTANT	0.000	-999.	0.000	-999.
Air diffusion coefficient	cm2/s	CONSTANT	0.000	-999.	0.000	10.0
Reference temperature for air diffusion	C	CONSTANT	0.000	-999.	0.000	100.
Molecular weight	g/M	CONSTANT	0.000	-999.	0.000	-999.
Mole fraction of solute	--	CONSTANT	0.000	-999.	0.100E-08	1.00
Vapor pressure of solute	mm Hg	CONSTANT	0.000	-999.	0.000	100.
Henry`s law constant	atm-m^3/M	CONSTANT	0.000	-999.	0.100E-09	1.00
Overall 1st order decay sat. zone	1/yr	DERIVED	0.000	0.000	0.000	1.00
Soil/Air Boundary Layer Thickness	cm	CONSTANT	-999.	-999.	0.000	-999.
Not currently used		CONSTANT	-999.	-999.	0.000	1.00

SOURCE SPECIFIC VARIABLES

VARIABLE NAME	UNITS	DISTRIBUTION	PARAMETERS MEAN	PARAMETERS STD DEV	LIMITS MIN	LIMITS MAX
Infiltration rate	m/yr	CONSTANT	0.170E-03	-999.	0.100E-09	0.100E+11
Area of waste disposal unit	m^2	CONSTANT	0.320E+06	-999.	0.100E-01	-999.
Duration of pulse	yr	CONSTANT	0.100E+05	-999.	0.100E-08	-999.
Spread of contaminant source	m	DERIVED	-999.	-999.	0.100E-08	0.100E+11
Recharge rate	m/yr	CONSTANT	0.282E-01	-999.	0.000	0.100E+11
Source decay constant	1/yr	CONSTANT	0.000	-999.	0.000	-999.
Initial concentration at landfill	mg/l	CONSTANT	1.00	-999.	0.000	-999.

Length scale of facility	m	DERIVED	-999.	-999.	0.100E-08	0.100E+11
Width scale of facility	m	DERIVED	-999.	-999.	0.100E-08	0.100E+11
Near field dilution		DERIVED	1.00	0.000	0.000	1.00

1

AQUIFER SPECIFIC VARIABLES

VARIABLE NAME	UNITS	DISTRIBUTION	PARAMETERS MEAN	PARAMETERS STD DEV	LIMITS MIN	LIMITS MAX
Particle diameter	cm	CONSTANT	0.25E-01	-999.	0.100E-08	100.
Aquifer porosity	--	CONSTANT	0.100	-999.	0.100E-08	0.990
Bulk density	g/cc	CONSTANT	2.40	-999.	0.100E-01	5.00
Aquifer thickness	m	CONSTANT	45.7	-999.	0.100E-08	0.100E+06
Source thickness (mixing zone depth)	m	DERIVED	-999.	-999.	0.100E-08	0.100E+06
Conductivity (hydraulic)	m/yr	CONSTANT	50.0	-999.	0.100E-06	0.100E+09
Gradient (hydraulic)		CONSTANT	0.110E-01	-999.	0.100E-07	-999.
Groundwater seepage velocity	m/yr	DERIVED	-999.	-999.	0.100E-09	0.100E+09
Retardation coefficient	--	DERIVED	-999.	-999.	1.00	0.100E+09
Longitudinal dispersivity	m	FUNCTION OF X	-999.	-999.	-999.	-999.
Transverse dispersivity	m	FUNCTION OF X	-999.	-999.	-999.	-999.
Vertical dispersivity	m	FUNCTION OF X	-999.	-999.	-999.	-999.
Temperature of aquifer	C	CONSTANT	25.0	-999.	0.000	100.
pH	--	CONSTANT	7.20	-999.	0.300	14.0
Organic carbon content (fraction)		CONSTANT	0.300E-02	-999.	0.100E-05	1.00
Well distance from site	m	CONSTANT	1.00	-999.	1.00	-999.
Angle off center	degree	CONSTANT	0.000	-999.	0.000	360.
Well vertical distance	m	CONSTANT	0.000	-999.	0.000	1.00

1

TIME	CONCENTRATION
0.100E+02	0.00000E+00
0.200E+02	0.00000E+00
0.300E+02	0.00000E+00
0.400E+02	0.00000E+00
0.500E+02	0.00000E+00
0.600E+02	0.00000E+00
0.700E+02	0.00000E+00
0.800E+02	0.00000E+00
0.900E+02	0.00000E+00

0.100E+03	0.00000E+00
0.150E+03	0.00000E+00
0.200E+03	0.00000E+00
0.250E+03	0.00000E+00
0.300E+03	0.00000E+00
0.350E+03	0.00000E+00
0.400E+03	0.00000E+00
0.450E+03	0.00000E+00
0.500E+03	0.00000E+00
0.550E+03	0.00000E+00
0.600E+03	0.00000E+00
0.650E+03	0.00000E+00
0.700E+03	0.00000E+00
0.750E+03	0.00000E+00
0.800E+03	0.00000E+00
0.850E+03	0.00000E+00
0.900E+03	0.00000E+00
0.950E+03	0.00000E+00
0.100E+04	0.00000E+00
0.105E+04	0.00000E+00
0.110E+04	0.00000E+00
0.115E+04	0.00000E+00
0.120E+04	0.00000E+00
0.125E+04	0.00000E+00
0.130E+04	0.00000E+00
0.135E+04	0.00000E+00
0.140E+04	0.00000E+00
0.145E+04	0.00000E+00
0.150E+04	0.00000E+00
0.155E+04	0.00000E+00
0.160E+04	0.00000E+00
0.165E+04	0.00000E+00
0.170E+04	0.00000E+00
0.175E+04	0.00000E+00
0.180E+04	0.00000E+00
0.185E+04	0.00000E+00
0.190E+04	0.55997E-04
0.195E+04	0.15568E-03
0.200E+04	0.25536E-03
0.205E+04	0.35504E-03
0.210E+04	0.45472E-03
0.215E+04	0.55440E-03
0.220E+04	0.65408E-03
0.225E+04	0.75376E-03
0.230E+04	0.85344E-03

0.235E+04	0.95312E-03
0.240E+04	0.10913E-02
0.245E+04	0.13278E-02
0.250E+04	0.15642E-02
0.255E+04	0.18006E-02
0.260E+04	0.20371E-02
0.265E+04	0.22735E-02
0.270E+04	0.25100E-02
0.275E+04	0.27464E-02
0.280E+04	0.29829E-02
0.285E+04	0.32388E-02
0.290E+04	0.35026E-02
0.295E+04	0.37665E-02
0.300E+04	0.40303E-02
0.305E+04	0.42942E-02
0.310E+04	0.45581E-02
0.315E+04	0.48219E-02
0.320E+04	0.50325E-02
0.325E+04	0.52023E-02
0.400E+04	0.77479E-02
0.500E+04	0.90033E-02
0.600E+04	0.91591E-02
0.700E+04	0.91221E-02
0.800E+04	0.91059E-02
0.900E+04	0.91135E-02
0.100E+05	0.91261E-02

```
1
                    U. S.   E N V I R O N M E N T A L   P R O T E C T I O N   A G E N C Y

                                E X P O S U R E   A S S E S S M E N T

                                  M U L T I M E D I A   M O D E L

                              MULTIMED - (Version 2.00 Beta - October 1996)
1
 Run options
 --- -------



 DEFAULT


 DEL RIO LF VERTICAL EXPAN
 Chemical simulated is DEFAULT CHEMICAL


 Option Chosen                        Saturated and unsaturated zone models
 Run was                              DETERMIN
 Infiltration input by user
 Run was transient
 Reject runs if Y coordinate outside plume
 Reject runs if Z coordinate outside plume
 Gaussian source used in saturated zone model
1
1
 UNSATURATED ZONE FLOW MODEL PARAMETERS
 (input parameter description and value)
 NP      - Total number of nodal points                240
 NMAT    - Number of different porous materials          1
 KPROP   - Van Genuchten or Brooks and Corey             1
 IMSHGN  - Spatial discretization option                 1
 NVFLAYR - Number of layers in flow model                1


 OPTIONS CHOSEN
 ------- ------
 Van Genuchten functional coefficients
 User defined coordinate system
1
```

```
Layer information
-----------------
LAYER NO.    LAYER THICKNESS     MATERIAL PROPERTY
---------    ---------------     -----------------
    1                 23.80             1


                                                DATA FOR MATERIAL  1
                                                ---- --- --------
                                            VADOSE ZONE MATERIAL VARIABLES


          ----------------------------------------------------------------------------------------------------------------
-
                     VARIABLE NAME                UNITS      DISTRIBUTION          PARAMETERS              LIMITS
                                                                                  MEAN     STD DEV      MIN         MAX
          ----------------------------------------------------------------------------------------------------------------
-
          Saturated hydraulic conductivity          cm/hr       CONSTANT        0.720E-03 -999.       0.100E-10  0.100E+05
          Unsaturated zone porosity                 --          CONSTANT        0.200E-01 -999.       0.100E-08  0.990
          Air entry pressure head                   m           CONSTANT        0.000     -999.       0.000      -999.
          Depth of the unsaturated zone             m           CONSTANT         23.8     -999.       0.100E-08  -999.


                                                DATA FOR MATERIAL  1
                                                ---- --- --------
                                            VADOSE ZONE FUNCTION VARIABLES


          ----------------------------------------------------------------------------------------------------------------
-
                     VARIABLE NAME                UNITS      DISTRIBUTION          PARAMETERS              LIMITS
                                                                                  MEAN     STD DEV      MIN         MAX
          ----------------------------------------------------------------------------------------------------------------
-
          Residual water content                    --          CONSTANT        0.680E-01 -999.       0.100E-08   1.00
          Brook and Corey exponent,EN               --          CONSTANT        0.000     -999.       0.000       10.0
          ALFA coefficient                         1/cm         CONSTANT        0.800E-02 -999.       0.000       1.00
          Van Genuchten exponent, ENN               --          CONSTANT         1.09     -999.        1.00       5.00
1

 UNSATURATED ZONE TRANSPORT MODEL PARAMETERS

 Currently Not Used in Multimed  Version 2.0             1
```

```
NTSTPS - Number of time values concentration calc       20
DUMMY  - Not presently used                              1
ISOL   - Type of scheme used in unsaturated zone         1
N      - Stehfest terms or number of increments         18
NTEL   - Points in Lagrangian interpolation              3
NGPTS  - Number of Gauss points                        104
NIT    - Convolution integral segments                   2
IBOUND - Type of boundary condition                      2
ITSGEN - Time values generated or input                  1
TMAX   - Max simulation time             --            0.0
WTFUN  - Weighting factor                --            1.2
Used only for Numerical Model            --            0.0
Used only for Numerical Model            --            0.0
Used only for Numerical Model            --            0.0
Used only for Numerical Model            --            0.0
Used only for Numerical Model            --            0.0


OPTIONS CHOSEN
------- ------
Analytical unsaturated zone model
Stehfest numerical inversion algorithm
Nondecaying pulse source
Computer generated times for computing concentrations
1


                                                DATA FOR MATERIAL  1
                                                ---- --- --------
                                                VADOSE TRANSPORT VARIABLES


          ---------------------------------------------------------------------------------------------------------------
-
                     VARIABLE NAME                UNITS      DISTRIBUTION          PARAMETERS              LIMITS
                                                                                  MEAN     STD DEV      MIN         MAX
          ---------------------------------------------------------------------------------------------------------------
-
          Longitudinal dispersivity of material      m          DERIVED         -999.     -999.       0.100E-02  0.100E+05
          Percent organic matter                    --          CONSTANT         1.34     -999.       0.000       100.
          Bulk density of soil for material         g/cc        CONSTANT         1.30     -999.       0.100E-01   5.00
          Biological decay coefficient            1/yr          CONSTANT        0.000     -999.       0.000      -999.
          Parameter not used by the Analytical Model            CONSTANT        0.000     0.000       0.000      0.000
          Parameter not used by the Analytical Model            CONSTANT        0.000     0.000       0.000      0.000
1
```

CHEMICAL SPECIFIC VARIABLES

VARIABLE NAME	UNITS	DISTRIBUTION	PARAMETERS MEAN	PARAMETERS STD DEV	LIMITS MIN	LIMITS MAX
Solid phase decay coefficient	1/yr	CONSTANT	0.000	-999.	0.000	0.100E+11
Dissolved phase decay coefficient	1/yr	CONSTANT	0.000	-999.	0.000	0.100E+11
Overall chemical decay coefficient	1/yr	CONSTANT	0.000	-999.	0.000	0.100E+11
Acid catalyzed hydrolysis rate	l/M-yr	CONSTANT	0.000	-999.	0.000	-999.
Neutral hydrolysis rate constant	1/yr	CONSTANT	0.000	-999.	0.000	-999.
Base catalyzed hydrolysis rate	l/M-yr	CONSTANT	0.000	-999.	0.000	-999.
Reference temperature	C	CONSTANT	25.0	-999.	0.000	100.
Normalized distribution coefficient	ml/g	CONSTANT	0.000	-999.	0.000	-999.
Distribution coefficient	--	DERIVED	-999.	-999.	0.000	0.100E+11
Biodegradation coefficient (sat. zone)	1/yr	CONSTANT	0.000	-999.	0.000	-999.
Air diffusion coefficient	cm2/s	CONSTANT	0.000	-999.	0.000	10.0
Reference temperature for air diffusion	C	CONSTANT	0.000	-999.	0.000	100.
Molecular weight	g/M	CONSTANT	0.000	-999.	0.000	-999.
Mole fraction of solute	--	CONSTANT	0.000	-999.	0.100E-08	1.00
Vapor pressure of solute	mm Hg	CONSTANT	0.000	-999.	0.000	100.
Henry`s law constant	atm-m^3/M	CONSTANT	0.000	-999.	0.100E-09	1.00
Overall 1st order decay sat. zone	1/yr	DERIVED	0.000	0.000	0.000	1.00
Soil/Air Boundary Layer Thickness	cm	CONSTANT	-999.	-999.	0.000	-999.
Not currently used		CONSTANT	-999.	-999.	0.000	1.00

SOURCE SPECIFIC VARIABLES

VARIABLE NAME	UNITS	DISTRIBUTION	PARAMETERS MEAN	PARAMETERS STD DEV	LIMITS MIN	LIMITS MAX
Infiltration rate	m/yr	CONSTANT	0.170E-03	-999.	0.100E-09	0.100E+11
Area of waste disposal unit	m^2	CONSTANT	0.320E+06	-999.	0.100E-01	-999.
Duration of pulse	yr	CONSTANT	0.100E+05	-999.	0.100E-08	-999.
Spread of contaminant source	m	DERIVED	-999.	-999.	0.100E-08	0.100E+11
Recharge rate	m/yr	CONSTANT	0.282E-01	-999.	0.000	0.100E+11
Source decay constant	1/yr	CONSTANT	0.000	-999.	0.000	-999.
Initial concentration at landfill	mg/l	CONSTANT	1.00	-999.	0.000	-999.

Length scale of facility	m	DERIVED	-999.	-999.	0.100E-08	0.100E+11
Width scale of facility	m	DERIVED	-999.	-999.	0.100E-08	0.100E+11
Near field dilution		DERIVED	1.00	0.000	0.000	1.00

1

AQUIFER SPECIFIC VARIABLES

-

VARIABLE NAME	UNITS	DISTRIBUTION	PARAMETERS		LIMITS	
			MEAN	STD DEV	MIN	MAX
Particle diameter	cm	CONSTANT	0.25E-01	-999.	0.100E-08	100.
Aquifer porosity	--	CONSTANT	0.100	-999.	0.100E-08	0.990
Bulk density	g/cc	CONSTANT	2.40	-999.	0.100E-01	5.00
Aquifer thickness	m	CONSTANT	183.	-999.	0.100E-08	0.100E+06
Source thickness (mixing zone depth)	m	DERIVED	-999.	-999.	0.100E-08	0.100E+06
Conductivity (hydraulic)	m/yr	CONSTANT	50.0	-999.	0.100E-06	0.100E+09
Gradient (hydraulic)		CONSTANT	0.110E-01	-999.	0.100E-07	-999.
Groundwater seepage velocity	m/yr	DERIVED	-999.	-999.	0.100E-09	0.100E+09
Retardation coefficient	--	DERIVED	-999.	-999.	1.00	0.100E+09
Longitudinal dispersivity	m	FUNCTION OF X	-999.	-999.	-999.	-999.
Transverse dispersivity	m	FUNCTION OF X	-999.	-999.	-999.	-999.
Vertical dispersivity	m	FUNCTION OF X	-999.	-999.	-999.	-999.
Temperature of aquifer	C	CONSTANT	25.0	-999.	0.000	100.
pH	--	CONSTANT	7.20	-999.	0.300	14.0
Organic carbon content (fraction)		CONSTANT	0.300E-02	-999.	0.100E-05	1.00
Well distance from site	m	CONSTANT	1.00	-999.	1.00	-999.
Angle off center	degree	CONSTANT	0.000	-999.	0.000	360.
Well vertical distance	m	CONSTANT	0.000	-999.	0.000	1.00

1

TIME	CONCENTRATION
0.100E+02	0.00000E+00
0.200E+02	0.00000E+00
0.300E+02	0.00000E+00
0.400E+02	0.00000E+00
0.500E+02	0.00000E+00
0.600E+02	0.00000E+00
0.700E+02	0.00000E+00
0.800E+02	0.00000E+00
0.900E+02	0.00000E+00

0.100E+03	0.00000E+00
0.150E+03	0.00000E+00
0.200E+03	0.00000E+00
0.250E+03	0.00000E+00
0.300E+03	0.00000E+00
0.350E+03	0.00000E+00
0.400E+03	0.00000E+00
0.450E+03	0.00000E+00
0.500E+03	0.00000E+00
0.550E+03	0.00000E+00
0.600E+03	0.00000E+00
0.650E+03	0.00000E+00
0.700E+03	0.00000E+00
0.750E+03	0.00000E+00
0.800E+03	0.00000E+00
0.850E+03	0.00000E+00
0.900E+03	0.00000E+00
0.950E+03	0.00000E+00
0.100E+04	0.00000E+00
0.105E+04	0.00000E+00
0.110E+04	0.00000E+00
0.115E+04	0.00000E+00
0.120E+04	0.00000E+00
0.125E+04	0.00000E+00
0.130E+04	0.00000E+00
0.135E+04	0.00000E+00
0.140E+04	0.00000E+00
0.145E+04	0.00000E+00
0.150E+04	0.00000E+00
0.155E+04	0.00000E+00
0.160E+04	0.00000E+00
0.165E+04	0.00000E+00
0.170E+04	0.00000E+00
0.175E+04	0.00000E+00
0.180E+04	0.00000E+00
0.185E+04	0.00000E+00
0.190E+04	0.42582E-04
0.195E+04	0.11838E-03
0.200E+04	0.19418E-03
0.205E+04	0.26998E-03
0.210E+04	0.34578E-03
0.215E+04	0.42159E-03
0.220E+04	0.49739E-03
0.225E+04	0.57319E-03
0.230E+04	0.64899E-03

0.235E+04	0.72479E-03
0.240E+04	0.82987E-03
0.245E+04	0.10097E-02
0.250E+04	0.11895E-02
0.255E+04	0.13693E-02
0.260E+04	0.15491E-02
0.265E+04	0.17289E-02
0.270E+04	0.19087E-02
0.275E+04	0.20885E-02
0.280E+04	0.22683E-02
0.285E+04	0.24629E-02
0.290E+04	0.26635E-02
0.295E+04	0.28642E-02
0.300E+04	0.30648E-02
0.305E+04	0.32655E-02
0.310E+04	0.34661E-02
0.315E+04	0.36668E-02
0.320E+04	0.38269E-02
0.325E+04	0.39560E-02
0.400E+04	0.58918E-02
0.500E+04	0.68465E-02
0.600E+04	0.69649E-02
0.700E+04	0.69367E-02
0.800E+04	0.69244E-02
0.900E+04	0.69302E-02
0.100E+05	0.69398E-02

```
1
                    U. S.   E N V I R O N M E N T A L   P R O T E C T I O N   A G E N C Y

                                E X P O S U R E   A S S E S S M E N T

                                  M U L T I M E D I A   M O D E L

                              MULTIMED - (Version 2.00 Beta - October 1996)
1
 Run options
 --- -------



 DEFAULT


 DEL RIO LF VERTICAL EXPAN
 Chemical simulated is DEFAULT CHEMICAL


 Option Chosen                        Saturated and unsaturated zone models
 Run was                              DETERMIN
 Infiltration input by user
 Run was transient
 Reject runs if Y coordinate outside plume
 Reject runs if Z coordinate outside plume
 Gaussian source used in saturated zone model
1
1
 UNSATURATED ZONE FLOW MODEL PARAMETERS
 (input parameter description and value)
 NP      - Total number of nodal points                240
 NMAT    - Number of different porous materials          1
 KPROP   - Van Genuchten or Brooks and Corey             1
 IMSHGN  - Spatial discretization option                 1
 NVFLAYR - Number of layers in flow model                1


 OPTIONS CHOSEN
 ------- ------
 Van Genuchten functional coefficients
 User defined coordinate system
1
```

```
Layer information
-----------------
LAYER NO.    LAYER THICKNESS     MATERIAL PROPERTY
---------    ---------------     -----------------
    1                 23.80             1


                                                DATA FOR MATERIAL  1
                                                ---- --- --------
                                            VADOSE ZONE MATERIAL VARIABLES


          ----------------------------------------------------------------------------------------------------------------
-
                     VARIABLE NAME                UNITS      DISTRIBUTION          PARAMETERS              LIMITS
                                                                                  MEAN     STD DEV      MIN         MAX
          ----------------------------------------------------------------------------------------------------------------
-
          Saturated hydraulic conductivity          cm/hr       CONSTANT        0.720E-03 -999.       0.100E-10  0.100E+05
          Unsaturated zone porosity                 --          CONSTANT        0.200E-01 -999.       0.100E-08  0.990
          Air entry pressure head                   m           CONSTANT        0.000     -999.       0.000      -999.
          Depth of the unsaturated zone             m           CONSTANT         23.8     -999.       0.100E-08  -999.


                                                DATA FOR MATERIAL  1
                                                ---- --- --------
                                            VADOSE ZONE FUNCTION VARIABLES


          ----------------------------------------------------------------------------------------------------------------
-
                     VARIABLE NAME                UNITS      DISTRIBUTION          PARAMETERS              LIMITS
                                                                                  MEAN     STD DEV      MIN         MAX
          ----------------------------------------------------------------------------------------------------------------
-
          Residual water content                    --          CONSTANT        0.680E-01 -999.       0.100E-08   1.00
          Brook and Corey exponent,EN               --          CONSTANT        0.000     -999.       0.000       10.0
          ALFA coefficient                         1/cm         CONSTANT        0.800E-02 -999.       0.000       1.00
          Van Genuchten exponent, ENN               --          CONSTANT         1.09     -999.        1.00       5.00
1

 UNSATURATED ZONE TRANSPORT MODEL PARAMETERS

 Currently Not Used in Multimed  Version 2.0             1
```

```
NTSTPS - Number of time values concentration calc       20
DUMMY  - Not presently used                              1
ISOL   - Type of scheme used in unsaturated zone         1
N      - Stehfest terms or number of increments         18
NTEL   - Points in Lagrangian interpolation              3
NGPTS  - Number of Gauss points                        104
NIT    - Convolution integral segments                   2
IBOUND - Type of boundary condition                      2
ITSGEN - Time values generated or input                  1
TMAX   - Max simulation time             --            0.0
WTFUN  - Weighting factor                --            1.2
Used only for Numerical Model            --            0.0
Used only for Numerical Model            --            0.0
Used only for Numerical Model            --            0.0
Used only for Numerical Model            --            0.0
Used only for Numerical Model            --            0.0


OPTIONS CHOSEN
------- ------
Analytical unsaturated zone model
Stehfest numerical inversion algorithm
Nondecaying pulse source
Computer generated times for computing concentrations
1


                                                DATA FOR MATERIAL  1
                                                ---- --- --------
                                                VADOSE TRANSPORT VARIABLES


          ---------------------------------------------------------------------------------------------------------------
-
                     VARIABLE NAME                UNITS      DISTRIBUTION          PARAMETERS              LIMITS
                                                                                  MEAN     STD DEV      MIN         MAX
          ---------------------------------------------------------------------------------------------------------------
-
          Longitudinal dispersivity of material      m          DERIVED         -999.     -999.       0.100E-02  0.100E+05
          Percent organic matter                    --          CONSTANT         1.34     -999.       0.000       100.
          Bulk density of soil for material         g/cc        CONSTANT         1.30     -999.       0.100E-01   5.00
          Biological decay coefficient            1/yr          CONSTANT        0.000     -999.       0.000      -999.
          Parameter not used by the Analytical Model            CONSTANT        0.000     0.000       0.000      0.000
          Parameter not used by the Analytical Model            CONSTANT        0.000     0.000       0.000      0.000
1
```

CHEMICAL SPECIFIC VARIABLES

VARIABLE NAME	UNITS	DISTRIBUTION	PARAMETERS MEAN	PARAMETERS STD DEV	LIMITS MIN	LIMITS MAX
Solid phase decay coefficient	1/yr	CONSTANT	0.000	-999.	0.000	0.100E+11
Dissolved phase decay coefficient	1/yr	CONSTANT	0.000	-999.	0.000	0.100E+11
Overall chemical decay coefficient	1/yr	CONSTANT	0.000	-999.	0.000	0.100E+11
Acid catalyzed hydrolysis rate	l/M-yr	CONSTANT	0.000	-999.	0.000	-999.
Neutral hydrolysis rate constant	1/yr	CONSTANT	0.000	-999.	0.000	-999.
Base catalyzed hydrolysis rate	l/M-yr	CONSTANT	0.000	-999.	0.000	-999.
Reference temperature	C	CONSTANT	25.0	-999.	0.000	100.
Normalized distribution coefficient	ml/g	CONSTANT	0.000	-999.	0.000	-999.
Distribution coefficient	--	DERIVED	-999.	-999.	0.000	0.100E+11
Biodegradation coefficient (sat. zone)	1/yr	CONSTANT	0.000	-999.	0.000	-999.
Air diffusion coefficient	cm2/s	CONSTANT	0.000	-999.	0.000	10.0
Reference temperature for air diffusion	C	CONSTANT	0.000	-999.	0.000	100.
Molecular weight	g/M	CONSTANT	0.000	-999.	0.000	-999.
Mole fraction of solute	--	CONSTANT	0.000	-999.	0.100E-08	1.00
Vapor pressure of solute	mm Hg	CONSTANT	0.000	-999.	0.000	100.
Henry`s law constant	atm-m^3/M	CONSTANT	0.000	-999.	0.100E-09	1.00
Overall 1st order decay sat. zone	1/yr	DERIVED	0.000	0.000	0.000	1.00
Soil/Air Boundary Layer Thickness	cm	CONSTANT	-999.	-999.	0.000	-999.
Not currently used		CONSTANT	-999.	-999.	0.000	1.00

SOURCE SPECIFIC VARIABLES

VARIABLE NAME	UNITS	DISTRIBUTION	PARAMETERS MEAN	PARAMETERS STD DEV	LIMITS MIN	LIMITS MAX
Infiltration rate	m/yr	CONSTANT	0.170E-03	-999.	0.100E-09	0.100E+11
Area of waste disposal unit	m^2	CONSTANT	0.320E+06	-999.	0.100E-01	-999.
Duration of pulse	yr	CONSTANT	0.100E+05	-999.	0.100E-08	-999.
Spread of contaminant source	m	DERIVED	-999.	-999.	0.100E-08	0.100E+11
Recharge rate	m/yr	CONSTANT	0.282E-01	-999.	0.000	0.100E+11
Source decay constant	1/yr	CONSTANT	0.000	-999.	0.000	-999.
Initial concentration at landfill	mg/l	CONSTANT	1.00	-999.	0.000	-999.

Length scale of facility	m	DERIVED	-999.	-999.	0.100E-08	0.100E+11
Width scale of facility	m	DERIVED	-999.	-999.	0.100E-08	0.100E+11
Near field dilution		DERIVED	1.00	0.000	0.000	1.00

1

AQUIFER SPECIFIC VARIABLES

-

VARIABLE NAME	UNITS	DISTRIBUTION	PARAMETERS		LIMITS	
			MEAN	STD DEV	MIN	MAX

-

Particle diameter	cm	CONSTANT	0.25E-01	-999.	0.100E-08	100.
Aquifer porosity	--	CONSTANT	0.500E-01	-999.	0.100E-08	0.990
Bulk density	g/cc	CONSTANT	2.40	-999.	0.100E-01	5.00
Aquifer thickness	m	CONSTANT	91.4	-999.	0.100E-08	0.100E+06
Source thickness (mixing zone depth)	m	DERIVED	-999.	-999.	0.100E-08	0.100E+06
Conductivity (hydraulic)	m/yr	CONSTANT	50.0	-999.	0.100E-06	0.100E+09
Gradient (hydraulic)		CONSTANT	0.110E-01	-999.	0.100E-07	-999.
Groundwater seepage velocity	m/yr	DERIVED	-999.	-999.	0.100E-09	0.100E+09
Retardation coefficient	--	DERIVED	-999.	-999.	1.00	0.100E+09
Longitudinal dispersivity	m	FUNCTION OF X	-999.	-999.	-999.	-999.
Transverse dispersivity	m	FUNCTION OF X	-999.	-999.	-999.	-999.
Vertical dispersivity	m	FUNCTION OF X	-999.	-999.	-999.	-999.
Temperature of aquifer	C	CONSTANT	25.0	-999.	0.000	100.
pH	--	CONSTANT	7.20	-999.	0.300	14.0
Organic carbon content (fraction)		CONSTANT	0.300E-02	-999.	0.100E-05	1.00
Well distance from site	m	CONSTANT	1.00	-999.	1.00	-999.
Angle off center	degree	CONSTANT	0.000	-999.	0.000	360.
Well vertical distance	m	CONSTANT	0.000	-999.	0.000	1.00

1

TIME	CONCENTRATION
0.100E+02	0.00000E+00
0.200E+02	0.00000E+00
0.300E+02	0.00000E+00
0.400E+02	0.00000E+00
0.500E+02	0.00000E+00
0.600E+02	0.00000E+00
0.700E+02	0.00000E+00
0.800E+02	0.00000E+00
0.900E+02	0.00000E+00

0.100E+03	0.00000E+00
0.150E+03	0.00000E+00
0.200E+03	0.00000E+00
0.250E+03	0.00000E+00
0.300E+03	0.00000E+00
0.350E+03	0.00000E+00
0.400E+03	0.00000E+00
0.450E+03	0.00000E+00
0.500E+03	0.00000E+00
0.550E+03	0.00000E+00
0.600E+03	0.00000E+00
0.650E+03	0.00000E+00
0.700E+03	0.00000E+00
0.750E+03	0.00000E+00
0.800E+03	0.00000E+00
0.850E+03	0.00000E+00
0.900E+03	0.00000E+00
0.950E+03	0.00000E+00
0.100E+04	0.00000E+00
0.105E+04	0.00000E+00
0.110E+04	0.00000E+00
0.115E+04	0.00000E+00
0.120E+04	0.00000E+00
0.125E+04	0.00000E+00
0.130E+04	0.00000E+00
0.135E+04	0.00000E+00
0.140E+04	0.00000E+00
0.145E+04	0.00000E+00
0.150E+04	0.00000E+00
0.155E+04	0.00000E+00
0.160E+04	0.00000E+00
0.165E+04	0.00000E+00
0.170E+04	0.00000E+00
0.175E+04	0.00000E+00
0.180E+04	0.00000E+00
0.185E+04	0.00000E+00
0.190E+04	0.42573E-04
0.195E+04	0.11836E-03
0.200E+04	0.19414E-03
0.205E+04	0.26993E-03
0.210E+04	0.34571E-03
0.215E+04	0.42150E-03
0.220E+04	0.49728E-03
0.225E+04	0.57307E-03
0.230E+04	0.64885E-03

0.235E+04	0.72464E-03
0.240E+04	0.82970E-03
0.245E+04	0.10095E-02
0.250E+04	0.11892E-02
0.255E+04	0.13690E-02
0.260E+04	0.15488E-02
0.265E+04	0.17285E-02
0.270E+04	0.19083E-02
0.275E+04	0.20880E-02
0.280E+04	0.22678E-02
0.285E+04	0.24624E-02
0.290E+04	0.26630E-02
0.295E+04	0.28636E-02
0.300E+04	0.30642E-02
0.305E+04	0.32648E-02
0.310E+04	0.34654E-02
0.315E+04	0.36660E-02
0.320E+04	0.38261E-02
0.325E+04	0.39552E-02
0.400E+04	0.58906E-02
0.500E+04	0.68450E-02
0.600E+04	0.69634E-02
0.700E+04	0.69353E-02
0.800E+04	0.69230E-02
0.900E+04	0.69288E-02
0.100E+05	0.69384E-02

```
1
                    U. S.   E N V I R O N M E N T A L   P R O T E C T I O N   A G E N C Y

                                E X P O S U R E   A S S E S S M E N T

                                  M U L T I M E D I A   M O D E L

                              MULTIMED - (Version 2.00 Beta - October 1996)
1
 Run options
 --- -------



 DEFAULT


 DEL RIO LF VERTICAL EXPAN
 Chemical simulated is DEFAULT CHEMICAL


 Option Chosen                        Saturated and unsaturated zone models
 Run was                              DETERMIN
 Infiltration input by user
 Run was transient
 Reject runs if Y coordinate outside plume
 Reject runs if Z coordinate outside plume
 Gaussian source used in saturated zone model
1
1
 UNSATURATED ZONE FLOW MODEL PARAMETERS
 (input parameter description and value)
 NP      - Total number of nodal points                240
 NMAT    - Number of different porous materials          1
 KPROP   - Van Genuchten or Brooks and Corey             1
 IMSHGN  - Spatial discretization option                 1
 NVFLAYR - Number of layers in flow model                1


 OPTIONS CHOSEN
 ------- ------
 Van Genuchten functional coefficients
 User defined coordinate system
1
```

```
Layer information
-----------------
LAYER NO.    LAYER THICKNESS     MATERIAL PROPERTY
---------    ---------------     -----------------
    1                 23.80             1


                                                DATA FOR MATERIAL  1
                                                ---- --- --------
                                            VADOSE ZONE MATERIAL VARIABLES


          ----------------------------------------------------------------------------------------------------------------
-
                     VARIABLE NAME                UNITS      DISTRIBUTION          PARAMETERS              LIMITS
                                                                                  MEAN     STD DEV      MIN         MAX
          ----------------------------------------------------------------------------------------------------------------
-
          Saturated hydraulic conductivity          cm/hr       CONSTANT        0.720E-03 -999.       0.100E-10  0.100E+05
          Unsaturated zone porosity                 --          CONSTANT        0.200E-01 -999.       0.100E-08  0.990
          Air entry pressure head                   m           CONSTANT        0.000     -999.       0.000      -999.
          Depth of the unsaturated zone             m           CONSTANT         23.8     -999.       0.100E-08  -999.


                                                DATA FOR MATERIAL  1
                                                ---- --- --------
                                            VADOSE ZONE FUNCTION VARIABLES


          ----------------------------------------------------------------------------------------------------------------
-
                     VARIABLE NAME                UNITS      DISTRIBUTION          PARAMETERS              LIMITS
                                                                                  MEAN     STD DEV      MIN         MAX
          ----------------------------------------------------------------------------------------------------------------
-
          Residual water content                    --          CONSTANT        0.680E-01 -999.       0.100E-08   1.00
          Brook and Corey exponent,EN               --          CONSTANT        0.000     -999.       0.000       10.0
          ALFA coefficient                         1/cm         CONSTANT        0.800E-02 -999.       0.000       1.00
          Van Genuchten exponent, ENN               --          CONSTANT         1.09     -999.        1.00       5.00
1

 UNSATURATED ZONE TRANSPORT MODEL PARAMETERS

 Currently Not Used in Multimed  Version 2.0             1
```

```
NTSTPS - Number of time values concentration calc       20
DUMMY  - Not presently used                              1
ISOL   - Type of scheme used in unsaturated zone         1
N      - Stehfest terms or number of increments         18
NTEL   - Points in Lagrangian interpolation              3
NGPTS  - Number of Gauss points                        104
NIT    - Convolution integral segments                   2
IBOUND - Type of boundary condition                      2
ITSGEN - Time values generated or input                  1
TMAX   - Max simulation time             --            0.0
WTFUN  - Weighting factor                --            1.2
Used only for Numerical Model            --            0.0
Used only for Numerical Model            --            0.0
Used only for Numerical Model            --            0.0
Used only for Numerical Model            --            0.0
Used only for Numerical Model            --            0.0


OPTIONS CHOSEN
------- ------
Analytical unsaturated zone model
Stehfest numerical inversion algorithm
Nondecaying pulse source
Computer generated times for computing concentrations
1


                                                DATA FOR MATERIAL  1
                                                ---- --- --------
                                                VADOSE TRANSPORT VARIABLES


          ---------------------------------------------------------------------------------------------------------------
-
                     VARIABLE NAME                UNITS      DISTRIBUTION          PARAMETERS              LIMITS
                                                                                  MEAN     STD DEV      MIN         MAX
          ---------------------------------------------------------------------------------------------------------------
-
          Longitudinal dispersivity of material      m          DERIVED         -999.     -999.       0.100E-02  0.100E+05
          Percent organic matter                    --          CONSTANT         1.34     -999.       0.000       100.
          Bulk density of soil for material         g/cc        CONSTANT         1.30     -999.       0.100E-01   5.00
          Biological decay coefficient            1/yr          CONSTANT        0.000     -999.       0.000      -999.
          Parameter not used by the Analytical Model            CONSTANT        0.000     0.000       0.000      0.000
          Parameter not used by the Analytical Model            CONSTANT        0.000     0.000       0.000      0.000
1
```

CHEMICAL SPECIFIC VARIABLES

VARIABLE NAME	UNITS	DISTRIBUTION	PARAMETERS MEAN	PARAMETERS STD DEV	LIMITS MIN	LIMITS MAX
Solid phase decay coefficient	1/yr	CONSTANT	0.000	-999.	0.000	0.100E+11
Dissolved phase decay coefficient	1/yr	CONSTANT	0.000	-999.	0.000	0.100E+11
Overall chemical decay coefficient	1/yr	CONSTANT	0.000	-999.	0.000	0.100E+11
Acid catalyzed hydrolysis rate	l/M-yr	CONSTANT	0.000	-999.	0.000	-999.
Neutral hydrolysis rate constant	1/yr	CONSTANT	0.000	-999.	0.000	-999.
Base catalyzed hydrolysis rate	l/M-yr	CONSTANT	0.000	-999.	0.000	-999.
Reference temperature	C	CONSTANT	25.0	-999.	0.000	100.
Normalized distribution coefficient	ml/g	CONSTANT	0.000	-999.	0.000	-999.
Distribution coefficient	--	DERIVED	-999.	-999.	0.000	0.100E+11
Biodegradation coefficient (sat. zone)	1/yr	CONSTANT	0.000	-999.	0.000	-999.
Air diffusion coefficient	cm2/s	CONSTANT	0.000	-999.	0.000	10.0
Reference temperature for air diffusion	C	CONSTANT	0.000	-999.	0.000	100.
Molecular weight	g/M	CONSTANT	0.000	-999.	0.000	-999.
Mole fraction of solute	--	CONSTANT	0.000	-999.	0.100E-08	1.00
Vapor pressure of solute	mm Hg	CONSTANT	0.000	-999.	0.000	100.
Henry`s law constant	atm-m^3/M	CONSTANT	0.000	-999.	0.100E-09	1.00
Overall 1st order decay sat. zone	1/yr	DERIVED	0.000	0.000	0.000	1.00
Soil/Air Boundary Layer Thickness	cm	CONSTANT	-999.	-999.	0.000	-999.
Not currently used		CONSTANT	-999.	-999.	0.000	1.00

SOURCE SPECIFIC VARIABLES

VARIABLE NAME	UNITS	DISTRIBUTION	PARAMETERS MEAN	PARAMETERS STD DEV	LIMITS MIN	LIMITS MAX
Infiltration rate	m/yr	CONSTANT	0.170E-03	-999.	0.100E-09	0.100E+11
Area of waste disposal unit	m^2	CONSTANT	0.320E+06	-999.	0.100E-01	-999.
Duration of pulse	yr	CONSTANT	0.100E+05	-999.	0.100E-08	-999.
Spread of contaminant source	m	DERIVED	-999.	-999.	0.100E-08	0.100E+11
Recharge rate	m/yr	CONSTANT	0.282E-01	-999.	0.000	0.100E+11
Source decay constant	1/yr	CONSTANT	0.000	-999.	0.000	-999.
Initial concentration at landfill	mg/l	CONSTANT	1.00	-999.	0.000	-999.

Length scale of facility	m	DERIVED	-999.	-999.	0.100E-08	0.100E+11
Width scale of facility	m	DERIVED	-999.	-999.	0.100E-08	0.100E+11
Near field dilution		DERIVED	1.00	0.000	0.000	1.00

1

AQUIFER SPECIFIC VARIABLES

-

VARIABLE NAME	UNITS	DISTRIBUTION	PARAMETERS MEAN	PARAMETERS STD DEV	LIMITS MIN	LIMITS MAX
Particle diameter	cm	CONSTANT	0.25E-01	-999.	0.100E-08	100.
Aquifer porosity	--	CONSTANT	0.606	-999.	0.100E-08	0.990
Bulk density	g/cc	CONSTANT	2.40	-999.	0.100E-01	5.00
Aquifer thickness	m	CONSTANT	91.4	-999.	0.100E-08	0.100E+06
Source thickness (mixing zone depth)	m	DERIVED	-999.	-999.	0.100E-08	0.100E+06
Conductivity (hydraulic)	m/yr	CONSTANT	50.0	-999.	0.100E-06	0.100E+09
Gradient (hydraulic)		CONSTANT	0.110E-01	-999.	0.100E-07	-999.
Groundwater seepage velocity	m/yr	DERIVED	-999.	-999.	0.100E-09	0.100E+09
Retardation coefficient	--	DERIVED	-999.	-999.	1.00	0.100E+09
Longitudinal dispersivity	m	FUNCTION OF X	-999.	-999.	-999.	-999.
Transverse dispersivity	m	FUNCTION OF X	-999.	-999.	-999.	-999.
Vertical dispersivity	m	FUNCTION OF X	-999.	-999.	-999.	-999.
Temperature of aquifer	C	CONSTANT	25.0	-999.	0.000	100.
pH	--	CONSTANT	7.20	-999.	0.300	14.0
Organic carbon content (fraction)		CONSTANT	0.300E-02	-999.	0.100E-05	1.00
Well distance from site	m	CONSTANT	1.00	-999.	1.00	-999.
Angle off center	degree	CONSTANT	0.000	-999.	0.000	360.
Well vertical distance	m	CONSTANT	0.000	-999.	0.000	1.00

1

TIME	CONCENTRATION
0.100E+02	0.00000E+00
0.200E+02	0.00000E+00
0.300E+02	0.00000E+00
0.400E+02	0.00000E+00
0.500E+02	0.00000E+00
0.600E+02	0.00000E+00
0.700E+02	0.00000E+00
0.800E+02	0.00000E+00
0.900E+02	0.00000E+00

0.100E+03	0.00000E+00
0.150E+03	0.00000E+00
0.200E+03	0.00000E+00
0.250E+03	0.00000E+00
0.300E+03	0.00000E+00
0.350E+03	0.00000E+00
0.400E+03	0.00000E+00
0.450E+03	0.00000E+00
0.500E+03	0.00000E+00
0.550E+03	0.00000E+00
0.600E+03	0.00000E+00
0.650E+03	0.00000E+00
0.700E+03	0.00000E+00
0.750E+03	0.00000E+00
0.800E+03	0.00000E+00
0.850E+03	0.00000E+00
0.900E+03	0.00000E+00
0.950E+03	0.00000E+00
0.100E+04	0.00000E+00
0.105E+04	0.00000E+00
0.110E+04	0.00000E+00
0.115E+04	0.00000E+00
0.120E+04	0.00000E+00
0.125E+04	0.00000E+00
0.130E+04	0.00000E+00
0.135E+04	0.00000E+00
0.140E+04	0.00000E+00
0.145E+04	0.00000E+00
0.150E+04	0.00000E+00
0.155E+04	0.00000E+00
0.160E+04	0.00000E+00
0.165E+04	0.00000E+00
0.170E+04	0.00000E+00
0.175E+04	0.00000E+00
0.180E+04	0.00000E+00
0.185E+04	0.00000E+00
0.190E+04	0.42573E-04
0.195E+04	0.11836E-03
0.200E+04	0.19414E-03
0.205E+04	0.26993E-03
0.210E+04	0.34571E-03
0.215E+04	0.42150E-03
0.220E+04	0.49728E-03
0.225E+04	0.57306E-03
0.230E+04	0.64885E-03

0.235E+04	0.72463E-03
0.240E+04	0.82969E-03
0.245E+04	0.10095E-02
0.250E+04	0.11892E-02
0.255E+04	0.13690E-02
0.260E+04	0.15487E-02
0.265E+04	0.17285E-02
0.270E+04	0.19083E-02
0.275E+04	0.20880E-02
0.280E+04	0.22678E-02
0.285E+04	0.24623E-02
0.290E+04	0.26629E-02
0.295E+04	0.28635E-02
0.300E+04	0.30642E-02
0.305E+04	0.32648E-02
0.310E+04	0.34654E-02
0.315E+04	0.36660E-02
0.320E+04	0.38261E-02
0.325E+04	0.39551E-02
0.400E+04	0.58906E-02
0.500E+04	0.68450E-02
0.600E+04	0.69634E-02
0.700E+04	0.69353E-02
0.800E+04	0.69230E-02
0.900E+04	0.69287E-02
0.100E+05	0.69384E-02

```
1
                    U. S.   E N V I R O N M E N T A L   P R O T E C T I O N   A G E N C Y

                                E X P O S U R E   A S S E S S M E N T

                                  M U L T I M E D I A   M O D E L

                              MULTIMED - (Version 2.00 Beta - October 1996)
1
 Run options
 --- -------



 DEFAULT


 DEL RIO LF VERTICAL EXPAN
 Chemical simulated is DEFAULT CHEMICAL


 Option Chosen                        Saturated and unsaturated zone models
 Run was                              DETERMIN
 Infiltration input by user
 Run was transient
 Reject runs if Y coordinate outside plume
 Reject runs if Z coordinate outside plume
 Gaussian source used in saturated zone model
1
1
 UNSATURATED ZONE FLOW MODEL PARAMETERS
 (input parameter description and value)
 NP      - Total number of nodal points                240
 NMAT    - Number of different porous materials          1
 KPROP   - Van Genuchten or Brooks and Corey             1
 IMSHGN  - Spatial discretization option                 1
 NVFLAYR - Number of layers in flow model                1


 OPTIONS CHOSEN
 ------- ------
 Van Genuchten functional coefficients
 User defined coordinate system
1
```

```
Layer information
-----------------
LAYER NO.    LAYER THICKNESS     MATERIAL PROPERTY
---------    ---------------     -----------------
    1                 23.80             1


                                                DATA FOR MATERIAL  1
                                                ---- --- --------
                                            VADOSE ZONE MATERIAL VARIABLES


          ----------------------------------------------------------------------------------------------------------------
-
                     VARIABLE NAME                UNITS      DISTRIBUTION          PARAMETERS              LIMITS
                                                                                  MEAN     STD DEV      MIN         MAX
          ----------------------------------------------------------------------------------------------------------------
-
          Saturated hydraulic conductivity          cm/hr       CONSTANT        0.720E-03 -999.       0.100E-10  0.100E+05
          Unsaturated zone porosity                 --          CONSTANT        0.200E-01 -999.       0.100E-08  0.990
          Air entry pressure head                   m           CONSTANT        0.000     -999.       0.000      -999.
          Depth of the unsaturated zone             m           CONSTANT         23.8     -999.       0.100E-08  -999.


                                                DATA FOR MATERIAL  1
                                                ---- --- --------
                                            VADOSE ZONE FUNCTION VARIABLES


          ----------------------------------------------------------------------------------------------------------------
-
                     VARIABLE NAME                UNITS      DISTRIBUTION          PARAMETERS              LIMITS
                                                                                  MEAN     STD DEV      MIN         MAX
          ----------------------------------------------------------------------------------------------------------------
-
          Residual water content                    --          CONSTANT        0.680E-01 -999.       0.100E-08   1.00
          Brook and Corey exponent,EN               --          CONSTANT        0.000     -999.       0.000       10.0
          ALFA coefficient                         1/cm         CONSTANT        0.800E-02 -999.       0.000       1.00
          Van Genuchten exponent, ENN               --          CONSTANT         1.09     -999.        1.00       5.00
1

 UNSATURATED ZONE TRANSPORT MODEL PARAMETERS

 Currently Not Used in Multimed  Version 2.0             1
```

```
NTSTPS - Number of time values concentration calc       20
DUMMY  - Not presently used                              1
ISOL   - Type of scheme used in unsaturated zone         1
N      - Stehfest terms or number of increments         18
NTEL   - Points in Lagrangian interpolation              3
NGPTS  - Number of Gauss points                        104
NIT    - Convolution integral segments                   2
IBOUND - Type of boundary condition                      2
ITSGEN - Time values generated or input                  1
TMAX   - Max simulation time             --            0.0
WTFUN  - Weighting factor                --            1.2
Used only for Numerical Model            --            0.0
Used only for Numerical Model            --            0.0
Used only for Numerical Model            --            0.0
Used only for Numerical Model            --            0.0
Used only for Numerical Model            --            0.0


OPTIONS CHOSEN
------- ------
Analytical unsaturated zone model
Stehfest numerical inversion algorithm
Nondecaying pulse source
Computer generated times for computing concentrations
1


                                                DATA FOR MATERIAL  1
                                                ---- --- --------
                                                VADOSE TRANSPORT VARIABLES


          ---------------------------------------------------------------------------------------------------------------
-
                     VARIABLE NAME                UNITS      DISTRIBUTION          PARAMETERS              LIMITS
                                                                                   MEAN     STD DEV      MIN         MAX
          ---------------------------------------------------------------------------------------------------------------
-
          Longitudinal dispersivity of material      m          DERIVED         -999.     -999.       0.100E-02  0.100E+05
          Percent organic matter                    --          CONSTANT         1.34     -999.       0.000       100.
          Bulk density of soil for material         g/cc        CONSTANT         1.30     -999.       0.100E-01   5.00
          Biological decay coefficient            1/yr          CONSTANT        0.000     -999.       0.000      -999.
          Parameter not used by the Analytical Model            CONSTANT        0.000     0.000       0.000      0.000
          Parameter not used by the Analytical Model            CONSTANT        0.000     0.000       0.000      0.000
1
```

CHEMICAL SPECIFIC VARIABLES

VARIABLE NAME	UNITS	DISTRIBUTION	PARAMETERS MEAN	PARAMETERS STD DEV	LIMITS MIN	LIMITS MAX
Solid phase decay coefficient	1/yr	CONSTANT	0.000	-999.	0.000	0.100E+11
Dissolved phase decay coefficient	1/yr	CONSTANT	0.000	-999.	0.000	0.100E+11
Overall chemical decay coefficient	1/yr	CONSTANT	0.000	-999.	0.000	0.100E+11
Acid catalyzed hydrolysis rate	l/M-yr	CONSTANT	0.000	-999.	0.000	-999.
Neutral hydrolysis rate constant	1/yr	CONSTANT	0.000	-999.	0.000	-999.
Base catalyzed hydrolysis rate	l/M-yr	CONSTANT	0.000	-999.	0.000	-999.
Reference temperature	C	CONSTANT	25.0	-999.	0.000	100.
Normalized distribution coefficient	ml/g	CONSTANT	0.000	-999.	0.000	-999.
Distribution coefficient	--	DERIVED	-999.	-999.	0.000	0.100E+11
Biodegradation coefficient (sat. zone)	1/yr	CONSTANT	0.000	-999.	0.000	-999.
Air diffusion coefficient	cm2/s	CONSTANT	0.000	-999.	0.000	10.0
Reference temperature for air diffusion	C	CONSTANT	0.000	-999.	0.000	100.
Molecular weight	g/M	CONSTANT	0.000	-999.	0.000	-999.
Mole fraction of solute	--	CONSTANT	0.000	-999.	0.100E-08	1.00
Vapor pressure of solute	mm Hg	CONSTANT	0.000	-999.	0.000	100.
Henry`s law constant	atm-m^3/M	CONSTANT	0.000	-999.	0.100E-09	1.00
Overall 1st order decay sat. zone	1/yr	DERIVED	0.000	0.000	0.000	1.00
Soil/Air Boundary Layer Thickness	cm	CONSTANT	-999.	-999.	0.000	-999.
Not currently used		CONSTANT	-999.	-999.	0.000	1.00

SOURCE SPECIFIC VARIABLES

VARIABLE NAME	UNITS	DISTRIBUTION	PARAMETERS MEAN	PARAMETERS STD DEV	LIMITS MIN	LIMITS MAX
Infiltration rate	m/yr	CONSTANT	0.170E-03	-999.	0.100E-09	0.100E+11
Area of waste disposal unit	m^2	CONSTANT	0.320E+06	-999.	0.100E-01	-999.
Duration of pulse	yr	CONSTANT	0.100E+05	-999.	0.100E-08	-999.
Spread of contaminant source	m	DERIVED	-999.	-999.	0.100E-08	0.100E+11
Recharge rate	m/yr	CONSTANT	0.282E-01	-999.	0.000	0.100E+11
Source decay constant	1/yr	CONSTANT	0.000	-999.	0.000	-999.
Initial concentration at landfill	mg/l	CONSTANT	1.00	-999.	0.000	-999.

Length scale of facility	m	DERIVED	-999.	-999.	0.100E-08	0.100E+11
Width scale of facility	m	DERIVED	-999.	-999.	0.100E-08	0.100E+11
Near field dilution		DERIVED	1.00	0.000	0.000	1.00

1

AQUIFER SPECIFIC VARIABLES

VARIABLE NAME	UNITS	DISTRIBUTION	PARAMETERS		LIMITS	
			MEAN	STD DEV	MIN	MAX
Particle diameter	cm	CONSTANT	0.25E-01	-999.	0.100E-08	100.
Aquifer porosity	--	CONSTANT	0.100	-999.	0.100E-08	0.990
Bulk density	g/cc	CONSTANT	2.40	-999.	0.100E-01	5.00
Aquifer thickness	m	CONSTANT	91.4	-999.	0.100E-08	0.100E+06
Source thickness (mixing zone depth)	m	DERIVED	-999.	-999.	0.100E-08	0.100E+06
Conductivity (hydraulic)	m/yr	CONSTANT	50.0	-999.	0.100E-06	0.100E+09
Gradient (hydraulic)		CONSTANT	0.150E-02	-999.	0.100E-07	-999.
Groundwater seepage velocity	m/yr	DERIVED	-999.	-999.	0.100E-09	0.100E+09
Retardation coefficient	--	DERIVED	-999.	-999.	1.00	0.100E+09
Longitudinal dispersivity	m	FUNCTION OF X	-999.	-999.	-999.	-999.
Transverse dispersivity	m	FUNCTION OF X	-999.	-999.	-999.	-999.
Vertical dispersivity	m	FUNCTION OF X	-999.	-999.	-999.	-999.
Temperature of aquifer	C	CONSTANT	25.0	-999.	0.000	100.
pH	--	CONSTANT	7.20	-999.	0.300	14.0
Organic carbon content (fraction)		CONSTANT	0.300E-02	-999.	0.100E-05	1.00
Well distance from site	m	CONSTANT	1.00	-999.	1.00	-999.
Angle off center	degree	CONSTANT	0.000	-999.	0.000	360.
Well vertical distance	m	CONSTANT	0.000	-999.	0.000	1.00

1

TIME	CONCENTRATION
0.100E+02	0.00000E+00
0.200E+02	0.00000E+00
0.300E+02	0.00000E+00
0.400E+02	0.00000E+00
0.500E+02	0.00000E+00
0.600E+02	0.00000E+00
0.700E+02	0.00000E+00
0.800E+02	0.00000E+00
0.900E+02	0.00000E+00

0.100E+03	0.00000E+00
0.150E+03	0.00000E+00
0.200E+03	0.00000E+00
0.250E+03	0.00000E+00
0.300E+03	0.00000E+00
0.350E+03	0.00000E+00
0.400E+03	0.00000E+00
0.450E+03	0.00000E+00
0.500E+03	0.00000E+00
0.550E+03	0.00000E+00
0.600E+03	0.00000E+00
0.650E+03	0.00000E+00
0.700E+03	0.00000E+00
0.750E+03	0.00000E+00
0.800E+03	0.00000E+00
0.850E+03	0.00000E+00
0.900E+03	0.00000E+00
0.950E+03	0.00000E+00
0.100E+04	0.00000E+00
0.105E+04	0.00000E+00
0.110E+04	0.00000E+00
0.115E+04	0.00000E+00
0.120E+04	0.00000E+00
0.125E+04	0.00000E+00
0.130E+04	0.00000E+00
0.135E+04	0.00000E+00
0.140E+04	0.00000E+00
0.145E+04	0.00000E+00
0.150E+04	0.00000E+00
0.155E+04	0.00000E+00
0.160E+04	0.00000E+00
0.165E+04	0.00000E+00
0.170E+04	0.00000E+00
0.175E+04	0.00000E+00
0.180E+04	0.00000E+00
0.185E+04	0.00000E+00
0.190E+04	0.30551E-03
0.195E+04	0.84936E-03
0.200E+04	0.13932E-02
0.205E+04	0.19370E-02
0.210E+04	0.24809E-02
0.215E+04	0.30247E-02
0.220E+04	0.35686E-02
0.225E+04	0.41124E-02
0.230E+04	0.46563E-02

0.235E+04	0.52001E-02
0.240E+04	0.59541E-02
0.245E+04	0.72441E-02
0.250E+04	0.85341E-02
0.255E+04	0.98241E-02
0.260E+04	0.11114E-01
0.265E+04	0.12404E-01
0.270E+04	0.13694E-01
0.275E+04	0.14984E-01
0.280E+04	0.16274E-01
0.285E+04	0.17670E-01
0.290E+04	0.19110E-01
0.295E+04	0.20549E-01
0.300E+04	0.21989E-01
0.305E+04	0.23429E-01
0.310E+04	0.24868E-01
0.315E+04	0.26308E-01
0.320E+04	0.27457E-01
0.325E+04	0.28383E-01
0.400E+04	0.42272E-01
0.500E+04	0.49121E-01
0.600E+04	0.49971E-01
0.700E+04	0.49769E-01
0.800E+04	0.49681E-01
0.900E+04	0.49722E-01
0.100E+05	0.49791E-01

```
1
                    U. S.   E N V I R O N M E N T A L   P R O T E C T I O N   A G E N C Y

                                E X P O S U R E   A S S E S S M E N T

                                  M U L T I M E D I A   M O D E L

                              MULTIMED - (Version 2.00 Beta - October 1996)
1
 Run options
 --- -------



 DEFAULT


 DEL RIO LF VERTICAL EXPAN
 Chemical simulated is DEFAULT CHEMICAL


 Option Chosen                        Saturated and unsaturated zone models
 Run was                              DETERMIN
 Infiltration input by user
 Run was transient
 Reject runs if Y coordinate outside plume
 Reject runs if Z coordinate outside plume
 Gaussian source used in saturated zone model
1
1
 UNSATURATED ZONE FLOW MODEL PARAMETERS
 (input parameter description and value)
 NP      - Total number of nodal points                240
 NMAT    - Number of different porous materials          1
 KPROP   - Van Genuchten or Brooks and Corey             1
 IMSHGN  - Spatial discretization option                 1
 NVFLAYR - Number of layers in flow model                1


 OPTIONS CHOSEN
 ------- ------
 Van Genuchten functional coefficients
 User defined coordinate system
1
```

```
Layer information
-----------------
LAYER NO.    LAYER THICKNESS     MATERIAL PROPERTY
---------    ---------------     -----------------
    1                 23.80             1


                                                DATA FOR MATERIAL  1
                                                ---- --- --------
                                            VADOSE ZONE MATERIAL VARIABLES


          ----------------------------------------------------------------------------------------------------------------
-
                     VARIABLE NAME                UNITS      DISTRIBUTION          PARAMETERS              LIMITS
                                                                                  MEAN     STD DEV      MIN         MAX
          ----------------------------------------------------------------------------------------------------------------
-
          Saturated hydraulic conductivity          cm/hr       CONSTANT        0.720E-03 -999.       0.100E-10  0.100E+05
          Unsaturated zone porosity                 --          CONSTANT        0.200E-01 -999.       0.100E-08  0.990
          Air entry pressure head                   m           CONSTANT        0.000     -999.       0.000      -999.
          Depth of the unsaturated zone             m           CONSTANT         23.8     -999.       0.100E-08  -999.


                                                DATA FOR MATERIAL  1
                                                ---- --- --------
                                            VADOSE ZONE FUNCTION VARIABLES


          ----------------------------------------------------------------------------------------------------------------
-
                     VARIABLE NAME                UNITS      DISTRIBUTION          PARAMETERS              LIMITS
                                                                                  MEAN     STD DEV      MIN         MAX
          ----------------------------------------------------------------------------------------------------------------
-
          Residual water content                    --          CONSTANT        0.680E-01 -999.       0.100E-08   1.00
          Brook and Corey exponent,EN               --          CONSTANT        0.000     -999.       0.000       10.0
          ALFA coefficient                         1/cm         CONSTANT        0.800E-02 -999.       0.000       1.00
          Van Genuchten exponent, ENN               --          CONSTANT         1.09     -999.        1.00       5.00
1

 UNSATURATED ZONE TRANSPORT MODEL PARAMETERS

 Currently Not Used in Multimed  Version 2.0             1
```

```
NTSTPS - Number of time values concentration calc       20
DUMMY  - Not presently used                              1
ISOL   - Type of scheme used in unsaturated zone         1
N      - Stehfest terms or number of increments         18
NTEL   - Points in Lagrangian interpolation              3
NGPTS  - Number of Gauss points                        104
NIT    - Convolution integral segments                   2
IBOUND - Type of boundary condition                      2
ITSGEN - Time values generated or input                  1
TMAX   - Max simulation time             --            0.0
WTFUN  - Weighting factor                --            1.2
Used only for Numerical Model            --            0.0
Used only for Numerical Model            --            0.0
Used only for Numerical Model            --            0.0
Used only for Numerical Model            --            0.0
Used only for Numerical Model            --            0.0


OPTIONS CHOSEN
------- ------
Analytical unsaturated zone model
Stehfest numerical inversion algorithm
Nondecaying pulse source
Computer generated times for computing concentrations
1


                                                DATA FOR MATERIAL  1
                                                ---- --- --------
                                                VADOSE TRANSPORT VARIABLES


          ---------------------------------------------------------------------------------------------------------------
-
                     VARIABLE NAME                UNITS      DISTRIBUTION          PARAMETERS              LIMITS
                                                                                   MEAN     STD DEV      MIN         MAX
          ---------------------------------------------------------------------------------------------------------------
-
          Longitudinal dispersivity of material      m          DERIVED         -999.     -999.       0.100E-02  0.100E+05
          Percent organic matter                    --          CONSTANT         1.34     -999.       0.000       100.
          Bulk density of soil for material         g/cc        CONSTANT         1.30     -999.       0.100E-01   5.00
          Biological decay coefficient            1/yr          CONSTANT        0.000     -999.       0.000      -999.
          Parameter not used by the Analytical Model            CONSTANT        0.000     0.000       0.000      0.000
          Parameter not used by the Analytical Model            CONSTANT        0.000     0.000       0.000      0.000
1
```

CHEMICAL SPECIFIC VARIABLES

VARIABLE NAME	UNITS	DISTRIBUTION	PARAMETERS MEAN	PARAMETERS STD DEV	LIMITS MIN	LIMITS MAX
Solid phase decay coefficient	1/yr	CONSTANT	0.000	-999.	0.000	0.100E+11
Dissolved phase decay coefficient	1/yr	CONSTANT	0.000	-999.	0.000	0.100E+11
Overall chemical decay coefficient	1/yr	CONSTANT	0.000	-999.	0.000	0.100E+11
Acid catalyzed hydrolysis rate	l/M-yr	CONSTANT	0.000	-999.	0.000	-999.
Neutral hydrolysis rate constant	1/yr	CONSTANT	0.000	-999.	0.000	-999.
Base catalyzed hydrolysis rate	l/M-yr	CONSTANT	0.000	-999.	0.000	-999.
Reference temperature	C	CONSTANT	25.0	-999.	0.000	100.
Normalized distribution coefficient	ml/g	CONSTANT	0.000	-999.	0.000	-999.
Distribution coefficient	--	DERIVED	-999.	-999.	0.000	0.100E+11
Biodegradation coefficient (sat. zone)	1/yr	CONSTANT	0.000	-999.	0.000	-999.
Air diffusion coefficient	cm2/s	CONSTANT	0.000	-999.	0.000	10.0
Reference temperature for air diffusion	C	CONSTANT	0.000	-999.	0.000	100.
Molecular weight	g/M	CONSTANT	0.000	-999.	0.000	-999.
Mole fraction of solute	--	CONSTANT	0.000	-999.	0.100E-08	1.00
Vapor pressure of solute	mm Hg	CONSTANT	0.000	-999.	0.000	100.
Henry`s law constant	atm-m^3/M	CONSTANT	0.000	-999.	0.100E-09	1.00
Overall 1st order decay sat. zone	1/yr	DERIVED	0.000	0.000	0.000	1.00
Soil/Air Boundary Layer Thickness	cm	CONSTANT	-999.	-999.	0.000	-999.
Not currently used		CONSTANT	-999.	-999.	0.000	1.00

SOURCE SPECIFIC VARIABLES

VARIABLE NAME	UNITS	DISTRIBUTION	PARAMETERS MEAN	PARAMETERS STD DEV	LIMITS MIN	LIMITS MAX
Infiltration rate	m/yr	CONSTANT	0.170E-03	-999.	0.100E-09	0.100E+11
Area of waste disposal unit	m^2	CONSTANT	0.320E+06	-999.	0.100E-01	-999.
Duration of pulse	yr	CONSTANT	0.100E+05	-999.	0.100E-08	-999.
Spread of contaminant source	m	DERIVED	-999.	-999.	0.100E-08	0.100E+11
Recharge rate	m/yr	CONSTANT	0.282E-01	-999.	0.000	0.100E+11
Source decay constant	1/yr	CONSTANT	0.000	-999.	0.000	-999.
Initial concentration at landfill	mg/l	CONSTANT	1.00	-999.	0.000	-999.

Length scale of facility	m	DERIVED	-999.	-999.	0.100E-08	0.100E+11
Width scale of facility	m	DERIVED	-999.	-999.	0.100E-08	0.100E+11
Near field dilution		DERIVED	1.00	0.000	0.000	1.00

1

AQUIFER SPECIFIC VARIABLES

-

VARIABLE NAME	UNITS	DISTRIBUTION	PARAMETERS		LIMITS	
			MEAN	STD DEV	MIN	MAX
Particle diameter	cm	CONSTANT	0.25E-01	-999.	0.100E-08	100.
Aquifer porosity	--	CONSTANT	0.100	-999.	0.100E-08	0.990
Bulk density	g/cc	CONSTANT	2.40	-999.	0.100E-01	5.00
Aquifer thickness	m	CONSTANT	91.4	-999.	0.100E-08	0.100E+06
Source thickness (mixing zone depth)	m	DERIVED	-999.	-999.	0.100E-08	0.100E+06
Conductivity (hydraulic)	m/yr	CONSTANT	50.0	-999.	0.100E-06	0.100E+09
Gradient (hydraulic)		CONSTANT	0.150	-999.	0.100E-07	-999.
Groundwater seepage velocity	m/yr	DERIVED	-999.	-999.	0.100E-09	0.100E+09
Retardation coefficient	--	DERIVED	-999.	-999.	1.00	0.100E+09
Longitudinal dispersivity	m	FUNCTION OF X	-999.	-999.	-999.	-999.
Transverse dispersivity	m	FUNCTION OF X	-999.	-999.	-999.	-999.
Vertical dispersivity	m	FUNCTION OF X	-999.	-999.	-999.	-999.
Temperature of aquifer	C	CONSTANT	25.0	-999.	0.000	100.
pH	--	CONSTANT	7.20	-999.	0.300	14.0
Organic carbon content (fraction)		CONSTANT	0.300E-02	-999.	0.100E-05	1.00
Well distance from site	m	CONSTANT	1.00	-999.	1.00	-999.
Angle off center	degree	CONSTANT	0.000	-999.	0.000	360.
Well vertical distance	m	CONSTANT	0.000	-999.	0.000	1.00

1

TIME	CONCENTRATION
0.100E+02	0.00000E+00
0.200E+02	0.00000E+00
0.300E+02	0.00000E+00
0.400E+02	0.00000E+00
0.500E+02	0.00000E+00
0.600E+02	0.00000E+00
0.700E+02	0.00000E+00
0.800E+02	0.00000E+00
0.900E+02	0.00000E+00

0.100E+03	0.00000E+00
0.150E+03	0.00000E+00
0.200E+03	0.00000E+00
0.250E+03	0.00000E+00
0.300E+03	0.00000E+00
0.350E+03	0.00000E+00
0.400E+03	0.00000E+00
0.450E+03	0.00000E+00
0.500E+03	0.00000E+00
0.550E+03	0.00000E+00
0.600E+03	0.00000E+00
0.650E+03	0.00000E+00
0.700E+03	0.00000E+00
0.750E+03	0.00000E+00
0.800E+03	0.00000E+00
0.850E+03	0.00000E+00
0.900E+03	0.00000E+00
0.950E+03	0.00000E+00
0.100E+04	0.00000E+00
0.105E+04	0.00000E+00
0.110E+04	0.00000E+00
0.115E+04	0.00000E+00
0.120E+04	0.00000E+00
0.125E+04	0.00000E+00
0.130E+04	0.00000E+00
0.135E+04	0.00000E+00
0.140E+04	0.00000E+00
0.145E+04	0.00000E+00
0.150E+04	0.00000E+00
0.155E+04	0.00000E+00
0.160E+04	0.00000E+00
0.165E+04	0.00000E+00
0.170E+04	0.00000E+00
0.175E+04	0.00000E+00
0.180E+04	0.00000E+00
0.185E+04	0.00000E+00
0.190E+04	0.31318E-05
0.195E+04	0.87068E-05
0.200E+04	0.14282E-04
0.205E+04	0.19857E-04
0.210E+04	0.25432E-04
0.215E+04	0.31007E-04
0.220E+04	0.36582E-04
0.225E+04	0.42157E-04
0.230E+04	0.47731E-04

0.235E+04	0.53306E-04
0.240E+04	0.61035E-04
0.245E+04	0.74259E-04
0.250E+04	0.87483E-04
0.255E+04	0.10071E-03
0.260E+04	0.11393E-03
0.265E+04	0.12715E-03
0.270E+04	0.14038E-03
0.275E+04	0.15360E-03
0.280E+04	0.16683E-03
0.285E+04	0.18114E-03
0.290E+04	0.19590E-03
0.295E+04	0.21065E-03
0.300E+04	0.22541E-03
0.305E+04	0.24017E-03
0.310E+04	0.25492E-03
0.315E+04	0.26968E-03
0.320E+04	0.28146E-03
0.325E+04	0.29095E-03
0.400E+04	0.43333E-03
0.500E+04	0.50354E-03
0.600E+04	0.51225E-03
0.700E+04	0.51018E-03
0.800E+04	0.50928E-03
0.900E+04	0.50970E-03
0.100E+05	0.51041E-03

```
1
                    U. S.   E N V I R O N M E N T A L   P R O T E C T I O N   A G E N C Y

                                E X P O S U R E   A S S E S S M E N T

                                  M U L T I M E D I A   M O D E L

                              MULTIMED - (Version 2.00 Beta - October 1996)
1
 Run options
 --- -------



 DEFAULT


 DEL RIO LF VERTICAL EXPAN
 Chemical simulated is DEFAULT CHEMICAL


 Option Chosen                        Saturated and unsaturated zone models
 Run was                              DETERMIN
 Infiltration input by user
 Run was transient
 Reject runs if Y coordinate outside plume
 Reject runs if Z coordinate outside plume
 Gaussian source used in saturated zone model
1
1
 UNSATURATED ZONE FLOW MODEL PARAMETERS
 (input parameter description and value)
 NP      - Total number of nodal points                240
 NMAT    - Number of different porous materials          1
 KPROP   - Van Genuchten or Brooks and Corey             1
 IMSHGN  - Spatial discretization option                 1
 NVFLAYR - Number of layers in flow model                1


 OPTIONS CHOSEN
 ------- ------
 Van Genuchten functional coefficients
 User defined coordinate system
1
```

```
Layer information
-----------------
LAYER NO.    LAYER THICKNESS     MATERIAL PROPERTY
---------    ---------------     -----------------
    1                 23.80             1


                                                DATA FOR MATERIAL  1
                                                ---- --- --------
                                            VADOSE ZONE MATERIAL VARIABLES


          ----------------------------------------------------------------------------------------------------------------
-
                     VARIABLE NAME                UNITS      DISTRIBUTION          PARAMETERS              LIMITS
                                                                                  MEAN     STD DEV      MIN         MAX
          ----------------------------------------------------------------------------------------------------------------
-
          Saturated hydraulic conductivity          cm/hr       CONSTANT        0.720E-04 -999.       0.100E-10  0.100E+05
          Unsaturated zone porosity                 --          CONSTANT        0.200E-01 -999.       0.100E-08  0.990
          Air entry pressure head                   m           CONSTANT        0.000     -999.       0.000      -999.
          Depth of the unsaturated zone             m           CONSTANT         23.8     -999.       0.100E-08  -999.


                                                DATA FOR MATERIAL  1
                                                ---- --- --------
                                            VADOSE ZONE FUNCTION VARIABLES


          ----------------------------------------------------------------------------------------------------------------
-
                     VARIABLE NAME                UNITS      DISTRIBUTION          PARAMETERS              LIMITS
                                                                                  MEAN     STD DEV      MIN         MAX
          ----------------------------------------------------------------------------------------------------------------
-
          Residual water content                    --          CONSTANT        0.680E-01 -999.       0.100E-08   1.00
          Brook and Corey exponent,EN               --          CONSTANT        0.000     -999.       0.000       10.0
          ALFA coefficient                         1/cm         CONSTANT        0.800E-02 -999.       0.000       1.00
          Van Genuchten exponent, ENN               --          CONSTANT         1.09     -999.        1.00       5.00
1

 UNSATURATED ZONE TRANSPORT MODEL PARAMETERS

 Currently Not Used in Multimed  Version 2.0             1
```

```
NTSTPS - Number of time values concentration calc       20
DUMMY  - Not presently used                              1
ISOL   - Type of scheme used in unsaturated zone         1
N      - Stehfest terms or number of increments         18
NTEL   - Points in Lagrangian interpolation              3
NGPTS  - Number of Gauss points                        104
NIT    - Convolution integral segments                   2
IBOUND - Type of boundary condition                      2
ITSGEN - Time values generated or input                  1
TMAX   - Max simulation time             --            0.0
WTFUN  - Weighting factor                --            1.2
Used only for Numerical Model            --            0.0
Used only for Numerical Model            --            0.0
Used only for Numerical Model            --            0.0
Used only for Numerical Model            --            0.0
Used only for Numerical Model            --            0.0


OPTIONS CHOSEN
------- ------
Analytical unsaturated zone model
Stehfest numerical inversion algorithm
Nondecaying pulse source
Computer generated times for computing concentrations
1


                                                DATA FOR MATERIAL  1
                                                ---- --- --------
                                                VADOSE TRANSPORT VARIABLES


          ----------------------------------------------------------------------------------------------------------------
-
                     VARIABLE NAME                UNITS      DISTRIBUTION          PARAMETERS              LIMITS
                                                                                   MEAN     STD DEV      MIN         MAX
          ----------------------------------------------------------------------------------------------------------------
-
          Longitudinal dispersivity of material      m          DERIVED         -999.     -999.       0.100E-02  0.100E+05
          Percent organic matter                    --          CONSTANT         1.34     -999.       0.000       100.
          Bulk density of soil for material         g/cc        CONSTANT         1.30     -999.       0.100E-01   5.00
          Biological decay coefficient            1/yr          CONSTANT        0.000     -999.       0.000      -999.
          Parameter not used by the Analytical Model            CONSTANT        0.000     0.000       0.000      0.000
          Parameter not used by the Analytical Model            CONSTANT        0.000     0.000       0.000      0.000
1
```

CHEMICAL SPECIFIC VARIABLES

VARIABLE NAME	UNITS	DISTRIBUTION	PARAMETERS MEAN	PARAMETERS STD DEV	LIMITS MIN	LIMITS MAX
Solid phase decay coefficient	1/yr	CONSTANT	0.000	-999.	0.000	0.100E+11
Dissolved phase decay coefficient	1/yr	CONSTANT	0.000	-999.	0.000	0.100E+11
Overall chemical decay coefficient	1/yr	CONSTANT	0.000	-999.	0.000	0.100E+11
Acid catalyzed hydrolysis rate	l/M-yr	CONSTANT	0.000	-999.	0.000	-999.
Neutral hydrolysis rate constant	1/yr	CONSTANT	0.000	-999.	0.000	-999.
Base catalyzed hydrolysis rate	l/M-yr	CONSTANT	0.000	-999.	0.000	-999.
Reference temperature	C	CONSTANT	25.0	-999.	0.000	100.
Normalized distribution coefficient	ml/g	CONSTANT	0.000	-999.	0.000	-999.
Distribution coefficient	--	DERIVED	-999.	-999.	0.000	0.100E+11
Biodegradation coefficient (sat. zone)	1/yr	CONSTANT	0.000	-999.	0.000	-999.
Air diffusion coefficient	cm2/s	CONSTANT	0.000	-999.	0.000	10.0
Reference temperature for air diffusion	C	CONSTANT	0.000	-999.	0.000	100.
Molecular weight	g/M	CONSTANT	0.000	-999.	0.000	-999.
Mole fraction of solute	--	CONSTANT	0.000	-999.	0.100E-08	1.00
Vapor pressure of solute	mm Hg	CONSTANT	0.000	-999.	0.000	100.
Henry`s law constant	atm-m^3/M	CONSTANT	0.000	-999.	0.100E-09	1.00
Overall 1st order decay sat. zone	1/yr	DERIVED	0.000	0.000	0.000	1.00
Soil/Air Boundary Layer Thickness	cm	CONSTANT	-999.	-999.	0.000	-999.
Not currently used		CONSTANT	-999.	-999.	0.000	1.00

SOURCE SPECIFIC VARIABLES

VARIABLE NAME	UNITS	DISTRIBUTION	PARAMETERS MEAN	PARAMETERS STD DEV	LIMITS MIN	LIMITS MAX
Infiltration rate	m/yr	CONSTANT	0.170E-03	-999.	0.100E-09	0.100E+11
Area of waste disposal unit	m^2	CONSTANT	0.320E+06	-999.	0.100E-01	-999.
Duration of pulse	yr	CONSTANT	0.100E+05	-999.	0.100E-08	-999.
Spread of contaminant source	m	DERIVED	-999.	-999.	0.100E-08	0.100E+11
Recharge rate	m/yr	CONSTANT	0.282E-01	-999.	0.000	0.100E+11
Source decay constant	1/yr	CONSTANT	0.000	-999.	0.000	-999.
Initial concentration at landfill	mg/l	CONSTANT	1.00	-999.	0.000	-999.

Length scale of facility	m	DERIVED	-999.	-999.	0.100E-08	0.100E+11
Width scale of facility	m	DERIVED	-999.	-999.	0.100E-08	0.100E+11
Near field dilution		DERIVED	1.00	0.000	0.000	1.00

1

AQUIFER SPECIFIC VARIABLES

-

VARIABLE NAME	UNITS	DISTRIBUTION	PARAMETERS MEAN	PARAMETERS STD DEV	LIMITS MIN	LIMITS MAX
Particle diameter	cm	CONSTANT	0.25E-01	-999.	0.100E-08	100.
Aquifer porosity	--	CONSTANT	0.100	-999.	0.100E-08	0.990
Bulk density	g/cc	CONSTANT	2.40	-999.	0.100E-01	5.00
Aquifer thickness	m	CONSTANT	91.4	-999.	0.100E-08	0.100E+06
Source thickness (mixing zone depth)	m	DERIVED	-999.	-999.	0.100E-08	0.100E+06
Conductivity (hydraulic)	m/yr	CONSTANT	50.0	-999.	0.100E-06	0.100E+09
Gradient (hydraulic)		CONSTANT	0.110E-01	-999.	0.100E-07	-999.
Groundwater seepage velocity	m/yr	DERIVED	-999.	-999.	0.100E-09	0.100E+09
Retardation coefficient	--	DERIVED	-999.	-999.	1.00	0.100E+09
Longitudinal dispersivity	m	FUNCTION OF X	-999.	-999.	-999.	-999.
Transverse dispersivity	m	FUNCTION OF X	-999.	-999.	-999.	-999.
Vertical dispersivity	m	FUNCTION OF X	-999.	-999.	-999.	-999.
Temperature of aquifer	C	CONSTANT	25.0	-999.	0.000	100.
pH	--	CONSTANT	7.20	-999.	0.300	14.0
Organic carbon content (fraction)		CONSTANT	0.300E-02	-999.	0.100E-05	1.00
Well distance from site	m	CONSTANT	1.00	-999.	1.00	-999.
Angle off center	degree	CONSTANT	0.000	-999.	0.000	360.
Well vertical distance	m	CONSTANT	0.000	-999.	0.000	1.00

1

TIME	CONCENTRATION
0.100E+02	0.00000E+00
0.200E+02	0.00000E+00
0.300E+02	0.00000E+00
0.400E+02	0.00000E+00
0.500E+02	0.00000E+00
0.600E+02	0.00000E+00
0.700E+02	0.00000E+00
0.800E+02	0.00000E+00
0.900E+02	0.00000E+00

0.100E+03	0.00000E+00
0.150E+03	0.00000E+00
0.200E+03	0.00000E+00
0.250E+03	0.00000E+00
0.300E+03	0.00000E+00
0.350E+03	0.00000E+00
0.400E+03	0.00000E+00
0.450E+03	0.00000E+00
0.500E+03	0.00000E+00
0.550E+03	0.00000E+00
0.600E+03	0.00000E+00
0.650E+03	0.00000E+00
0.700E+03	0.00000E+00
0.750E+03	0.00000E+00
0.800E+03	0.00000E+00
0.850E+03	0.00000E+00
0.900E+03	0.00000E+00
0.950E+03	0.00000E+00
0.100E+04	0.00000E+00
0.105E+04	0.00000E+00
0.110E+04	0.00000E+00
0.115E+04	0.00000E+00
0.120E+04	0.00000E+00
0.125E+04	0.00000E+00
0.130E+04	0.00000E+00
0.135E+04	0.00000E+00
0.140E+04	0.00000E+00
0.145E+04	0.00000E+00
0.150E+04	0.00000E+00
0.155E+04	0.00000E+00
0.160E+04	0.00000E+00
0.165E+04	0.00000E+00
0.170E+04	0.15911E-04
0.175E+04	0.99827E-04
0.180E+04	0.18374E-03
0.185E+04	0.26766E-03
0.190E+04	0.35157E-03
0.195E+04	0.43549E-03
0.200E+04	0.51941E-03
0.205E+04	0.60332E-03
0.210E+04	0.68724E-03
0.215E+04	0.77115E-03
0.220E+04	0.95933E-03
0.225E+04	0.11584E-02
0.230E+04	0.13574E-02

0.235E+04	0.15565E-02
0.240E+04	0.17555E-02
0.245E+04	0.19546E-02
0.250E+04	0.21536E-02
0.255E+04	0.23565E-02
0.260E+04	0.25786E-02
0.265E+04	0.28007E-02
0.270E+04	0.30229E-02
0.275E+04	0.32450E-02
0.280E+04	0.34671E-02
0.285E+04	0.36893E-02
0.290E+04	0.38498E-02
0.295E+04	0.39855E-02
0.300E+04	0.41211E-02
0.305E+04	0.42568E-02
0.310E+04	0.43924E-02
0.315E+04	0.45281E-02
0.320E+04	0.46638E-02
0.325E+04	0.47994E-02
0.400E+04	0.65352E-02
0.500E+04	0.69707E-02
0.600E+04	0.69476E-02
0.700E+04	0.69230E-02
0.800E+04	0.69270E-02
0.900E+04	0.69380E-02
0.100E+05	0.69465E-02

```
1
                    U. S.   E N V I R O N M E N T A L   P R O T E C T I O N   A G E N C Y

                                E X P O S U R E   A S S E S S M E N T

                                  M U L T I M E D I A   M O D E L

                              MULTIMED - (Version 2.00 Beta - October 1996)
1
 Run options
 --- -------



 DEFAULT


 DEL RIO LF VERTICAL EXPAN
 Chemical simulated is DEFAULT CHEMICAL


 Option Chosen                        Saturated and unsaturated zone models
 Run was                              DETERMIN
 Infiltration input by user
 Run was transient
 Reject runs if Y coordinate outside plume
 Reject runs if Z coordinate outside plume
 Gaussian source used in saturated zone model
1
1
 UNSATURATED ZONE FLOW MODEL PARAMETERS
 (input parameter description and value)
 NP      - Total number of nodal points                240
 NMAT    - Number of different porous materials          1
 KPROP   - Van Genuchten or Brooks and Corey             1
 IMSHGN  - Spatial discretization option                 1
 NVFLAYR - Number of layers in flow model                1


 OPTIONS CHOSEN
 ------- ------
 Van Genuchten functional coefficients
 User defined coordinate system
1
```

Layer information

LAYER NO.	LAYER THICKNESS	MATERIAL PROPERTY
1	23.80	1

DATA FOR MATERIAL 1

VADOSE ZONE MATERIAL VARIABLES

VARIABLE NAME	UNITS	DISTRIBUTION	PARAMETERS MEAN	STD DEV	LIMITS MIN	MAX
Saturated hydraulic conductivity	cm/hr	CONSTANT	0.720E-02	-999.	0.100E-10	0.100E+05
Unsaturated zone porosity	--	CONSTANT	0.200E-01	-999.	0.100E-08	0.990
Air entry pressure head	m	CONSTANT	0.000	-999.	0.000	-999.
Depth of the unsaturated zone	m	CONSTANT	23.8	-999.	0.100E-08	-999.

DATA FOR MATERIAL 1

VADOSE ZONE FUNCTION VARIABLES

VARIABLE NAME	UNITS	DISTRIBUTION	PARAMETERS MEAN	STD DEV	LIMITS MIN	MAX
Residual water content	--	CONSTANT	0.680E-01	-999.	0.100E-08	1.00
Brook and Corey exponent,EN	--	CONSTANT	0.000	-999.	0.000	10.0
ALFA coefficient	1/cm	CONSTANT	0.800E-02	-999.	0.000	1.00
Van Genuchten exponent, ENN	--	CONSTANT	1.09	-999.	1.00	5.00

1

UNSATURATED ZONE TRANSPORT MODEL PARAMETERS

Currently Not Used in Multimed Version 2.0 1

```
NTSTPS - Number of time values concentration calc       20
DUMMY  - Not presently used                              1
ISOL   - Type of scheme used in unsaturated zone         1
N      - Stehfest terms or number of increments         18
NTEL   - Points in Lagrangian interpolation              3
NGPTS  - Number of Gauss points                        104
NIT    - Convolution integral segments                   2
IBOUND - Type of boundary condition                      2
ITSGEN - Time values generated or input                  1
TMAX   - Max simulation time             --            0.0
WTFUN  - Weighting factor                --            1.2
Used only for Numerical Model            --            0.0
Used only for Numerical Model            --            0.0
Used only for Numerical Model            --            0.0
Used only for Numerical Model            --            0.0
Used only for Numerical Model            --            0.0


OPTIONS CHOSEN
------- ------
Analytical unsaturated zone model
Stehfest numerical inversion algorithm
Nondecaying pulse source
Computer generated times for computing concentrations
1


                                                DATA FOR MATERIAL  1
                                                ---- --- --------
                                                VADOSE TRANSPORT VARIABLES


          ---------------------------------------------------------------------------------------------------------------
-
                     VARIABLE NAME                UNITS      DISTRIBUTION          PARAMETERS              LIMITS
                                                                                  MEAN     STD DEV      MIN         MAX
          ---------------------------------------------------------------------------------------------------------------
-
          Longitudinal dispersivity of material      m          DERIVED         -999.     -999.       0.100E-02  0.100E+05
          Percent organic matter                    --          CONSTANT         1.34     -999.       0.000       100.
          Bulk density of soil for material         g/cc        CONSTANT         1.30     -999.       0.100E-01   5.00
          Biological decay coefficient            1/yr          CONSTANT        0.000     -999.       0.000      -999.
          Parameter not used by the Analytical Model            CONSTANT        0.000     0.000       0.000      0.000
          Parameter not used by the Analytical Model            CONSTANT        0.000     0.000       0.000      0.000
1
```

CHEMICAL SPECIFIC VARIABLES

VARIABLE NAME	UNITS	DISTRIBUTION	PARAMETERS MEAN	PARAMETERS STD DEV	LIMITS MIN	LIMITS MAX
Solid phase decay coefficient	1/yr	CONSTANT	0.000	-999.	0.000	0.100E+11
Dissolved phase decay coefficient	1/yr	CONSTANT	0.000	-999.	0.000	0.100E+11
Overall chemical decay coefficient	1/yr	CONSTANT	0.000	-999.	0.000	0.100E+11
Acid catalyzed hydrolysis rate	l/M-yr	CONSTANT	0.000	-999.	0.000	-999.
Neutral hydrolysis rate constant	1/yr	CONSTANT	0.000	-999.	0.000	-999.
Base catalyzed hydrolysis rate	l/M-yr	CONSTANT	0.000	-999.	0.000	-999.
Reference temperature	C	CONSTANT	25.0	-999.	0.000	100.
Normalized distribution coefficient	ml/g	CONSTANT	0.000	-999.	0.000	-999.
Distribution coefficient	--	DERIVED	-999.	-999.	0.000	0.100E+11
Biodegradation coefficient (sat. zone)	1/yr	CONSTANT	0.000	-999.	0.000	-999.
Air diffusion coefficient	cm2/s	CONSTANT	0.000	-999.	0.000	10.0
Reference temperature for air diffusion	C	CONSTANT	0.000	-999.	0.000	100.
Molecular weight	g/M	CONSTANT	0.000	-999.	0.000	-999.
Mole fraction of solute	--	CONSTANT	0.000	-999.	0.100E-08	1.00
Vapor pressure of solute	mm Hg	CONSTANT	0.000	-999.	0.000	100.
Henry`s law constant	atm-m^3/M	CONSTANT	0.000	-999.	0.100E-09	1.00
Overall 1st order decay sat. zone	1/yr	DERIVED	0.000	0.000	0.000	1.00
Soil/Air Boundary Layer Thickness	cm	CONSTANT	-999.	-999.	0.000	-999.
Not currently used		CONSTANT	-999.	-999.	0.000	1.00

SOURCE SPECIFIC VARIABLES

VARIABLE NAME	UNITS	DISTRIBUTION	PARAMETERS MEAN	PARAMETERS STD DEV	LIMITS MIN	LIMITS MAX
Infiltration rate	m/yr	CONSTANT	0.170E-03	-999.	0.100E-09	0.100E+11
Area of waste disposal unit	m^2	CONSTANT	0.320E+06	-999.	0.100E-01	-999.
Duration of pulse	yr	CONSTANT	0.100E+05	-999.	0.100E-08	-999.
Spread of contaminant source	m	DERIVED	-999.	-999.	0.100E-08	0.100E+11
Recharge rate	m/yr	CONSTANT	0.282E-01	-999.	0.000	0.100E+11
Source decay constant	1/yr	CONSTANT	0.000	-999.	0.000	-999.
Initial concentration at landfill	mg/l	CONSTANT	1.00	-999.	0.000	-999.

Length scale of facility	m	DERIVED	-999.	-999.	0.100E-08	0.100E+11
Width scale of facility	m	DERIVED	-999.	-999.	0.100E-08	0.100E+11
Near field dilution		DERIVED	1.00	0.000	0.000	1.00

1

AQUIFER SPECIFIC VARIABLES

-

VARIABLE NAME	UNITS	DISTRIBUTION	PARAMETERS		LIMITS	
			MEAN	STD DEV	MIN	MAX
Particle diameter	cm	CONSTANT	0.25E-01	-999.	0.100E-08	100.
Aquifer porosity	--	CONSTANT	0.100	-999.	0.100E-08	0.990
Bulk density	g/cc	CONSTANT	2.40	-999.	0.100E-01	5.00
Aquifer thickness	m	CONSTANT	91.4	-999.	0.100E-08	0.100E+06
Source thickness (mixing zone depth)	m	DERIVED	-999.	-999.	0.100E-08	0.100E+06
Conductivity (hydraulic)	m/yr	CONSTANT	50.0	-999.	0.100E-06	0.100E+09
Gradient (hydraulic)		CONSTANT	0.110E-01	-999.	0.100E-07	-999.
Groundwater seepage velocity	m/yr	DERIVED	-999.	-999.	0.100E-09	0.100E+09
Retardation coefficient	--	DERIVED	-999.	-999.	1.00	0.100E+09
Longitudinal dispersivity	m	FUNCTION OF X	-999.	-999.	-999.	-999.
Transverse dispersivity	m	FUNCTION OF X	-999.	-999.	-999.	-999.
Vertical dispersivity	m	FUNCTION OF X	-999.	-999.	-999.	-999.
Temperature of aquifer	C	CONSTANT	25.0	-999.	0.000	100.
pH	--	CONSTANT	7.20	-999.	0.300	14.0
Organic carbon content (fraction)		CONSTANT	0.300E-02	-999.	0.100E-05	1.00
Well distance from site	m	CONSTANT	1.00	-999.	1.00	-999.
Angle off center	degree	CONSTANT	0.000	-999.	0.000	360.
Well vertical distance	m	CONSTANT	0.000	-999.	0.000	1.00

1

TIME	CONCENTRATION
0.100E+02	0.00000E+00
0.200E+02	0.00000E+00
0.300E+02	0.00000E+00
0.400E+02	0.00000E+00
0.500E+02	0.00000E+00
0.600E+02	0.00000E+00
0.700E+02	0.00000E+00
0.800E+02	0.00000E+00
0.900E+02	0.00000E+00

0.100E+03	0.00000E+00
0.150E+03	0.00000E+00
0.200E+03	0.00000E+00
0.250E+03	0.00000E+00
0.300E+03	0.00000E+00
0.350E+03	0.00000E+00
0.400E+03	0.00000E+00
0.450E+03	0.00000E+00
0.500E+03	0.00000E+00
0.550E+03	0.00000E+00
0.600E+03	0.00000E+00
0.650E+03	0.00000E+00
0.700E+03	0.00000E+00
0.750E+03	0.00000E+00
0.800E+03	0.00000E+00
0.850E+03	0.00000E+00
0.900E+03	0.00000E+00
0.950E+03	0.00000E+00
0.100E+04	0.00000E+00
0.105E+04	0.00000E+00
0.110E+04	0.00000E+00
0.115E+04	0.00000E+00
0.120E+04	0.00000E+00
0.125E+04	0.00000E+00
0.130E+04	0.00000E+00
0.135E+04	0.00000E+00
0.140E+04	0.00000E+00
0.145E+04	0.00000E+00
0.150E+04	0.00000E+00
0.155E+04	0.00000E+00
0.160E+04	0.00000E+00
0.165E+04	0.00000E+00
0.170E+04	0.00000E+00
0.175E+04	0.00000E+00
0.180E+04	0.00000E+00
0.185E+04	0.00000E+00
0.190E+04	0.00000E+00
0.195E+04	0.00000E+00
0.200E+04	0.00000E+00
0.205E+04	0.00000E+00
0.210E+04	0.00000E+00
0.215E+04	0.59306E-04
0.220E+04	0.12667E-03
0.225E+04	0.19403E-03
0.230E+04	0.26139E-03

0.235E+04	0.32875E-03
0.240E+04	0.39611E-03
0.245E+04	0.46347E-03
0.250E+04	0.53084E-03
0.255E+04	0.59820E-03
0.260E+04	0.66556E-03
0.265E+04	0.73292E-03
0.270E+04	0.82937E-03
0.275E+04	0.98916E-03
0.280E+04	0.11489E-02
0.285E+04	0.13087E-02
0.290E+04	0.14685E-02
0.295E+04	0.16283E-02
0.300E+04	0.17881E-02
0.305E+04	0.19479E-02
0.310E+04	0.21076E-02
0.315E+04	0.22674E-02
0.320E+04	0.24396E-02
0.325E+04	0.26179E-02
0.400E+04	0.47970E-02
0.500E+04	0.64870E-02
0.600E+04	0.69353E-02
0.700E+04	0.69627E-02
0.800E+04	0.69336E-02
0.900E+04	0.69230E-02
0.100E+05	0.69276E-02

```
1
                    U. S.   E N V I R O N M E N T A L   P R O T E C T I O N   A G E N C Y

                                E X P O S U R E   A S S E S S M E N T

                                  M U L T I M E D I A   M O D E L

                              MULTIMED - (Version 2.00 Beta - October 1996)
1
 Run options
 --- -------



 DEFAULT


 DEL RIO LF VERTICAL EXPAN
 Chemical simulated is DEFAULT CHEMICAL


 Option Chosen                        Saturated and unsaturated zone models
 Run was                              DETERMIN
 Infiltration input by user
 Run was transient
 Reject runs if Y coordinate outside plume
 Reject runs if Z coordinate outside plume
 Gaussian source used in saturated zone model
1
1
 UNSATURATED ZONE FLOW MODEL PARAMETERS
 (input parameter description and value)
 NP      - Total number of nodal points                240
 NMAT    - Number of different porous materials          1
 KPROP   - Van Genuchten or Brooks and Corey             1
 IMSHGN  - Spatial discretization option                 1
 NVFLAYR - Number of layers in flow model                1


 OPTIONS CHOSEN
 ------- ------
 Van Genuchten functional coefficients
 User defined coordinate system
1
```

Layer information

LAYER NO.	LAYER THICKNESS	MATERIAL PROPERTY
1	23.80	1

DATA FOR MATERIAL 1

VADOSE ZONE MATERIAL VARIABLES

VARIABLE NAME	UNITS	DISTRIBUTION	PARAMETERS MEAN	STD DEV	LIMITS MIN	MAX
Saturated hydraulic conductivity	cm/hr	CONSTANT	0.720E-03	-999.	0.100E-10	0.100E+05
Unsaturated zone porosity	--	CONSTANT	0.200E-02	-999.	0.100E-08	0.990
Air entry pressure head	m	CONSTANT	0.000	-999.	0.000	-999.
Depth of the unsaturated zone	m	CONSTANT	23.8	-999.	0.100E-08	-999.

DATA FOR MATERIAL 1

VADOSE ZONE FUNCTION VARIABLES

VARIABLE NAME	UNITS	DISTRIBUTION	PARAMETERS MEAN	STD DEV	LIMITS MIN	MAX
Residual water content	--	CONSTANT	0.680E-01	-999.	0.100E-08	1.00
Brook and Corey exponent,EN	--	CONSTANT	0.000	-999.	0.000	10.0
ALFA coefficient	1/cm	CONSTANT	0.800E-02	-999.	0.000	1.00
Van Genuchten exponent, ENN	--	CONSTANT	1.09	-999.	1.00	5.00

1

UNSATURATED ZONE TRANSPORT MODEL PARAMETERS

Currently Not Used in Multimed Version 2.0 1

```
NTSTPS - Number of time values concentration calc       20
DUMMY  - Not presently used                              1
ISOL   - Type of scheme used in unsaturated zone         1
N      - Stehfest terms or number of increments         18
NTEL   - Points in Lagrangian interpolation              3
NGPTS  - Number of Gauss points                        104
NIT    - Convolution integral segments                   2
IBOUND - Type of boundary condition                      2
ITSGEN - Time values generated or input                  1
TMAX   - Max simulation time             --            0.0
WTFUN  - Weighting factor                --            1.2
Used only for Numerical Model            --            0.0
Used only for Numerical Model            --            0.0
Used only for Numerical Model            --            0.0
Used only for Numerical Model            --            0.0
Used only for Numerical Model            --            0.0


OPTIONS CHOSEN
------- ------
Analytical unsaturated zone model
Stehfest numerical inversion algorithm
Nondecaying pulse source
Computer generated times for computing concentrations
1


                                                DATA FOR MATERIAL  1
                                                ---- --- --------
                                                VADOSE TRANSPORT VARIABLES


          ----------------------------------------------------------------------------------------------------------------
-
                     VARIABLE NAME                UNITS      DISTRIBUTION          PARAMETERS              LIMITS
                                                                                   MEAN     STD DEV      MIN         MAX
          ----------------------------------------------------------------------------------------------------------------
-
          Longitudinal dispersivity of material      m          DERIVED         -999.     -999.       0.100E-02  0.100E+05
          Percent organic matter                    --          CONSTANT         1.34     -999.       0.000       100.
          Bulk density of soil for material         g/cc        CONSTANT         1.30     -999.       0.100E-01   5.00
          Biological decay coefficient            1/yr          CONSTANT        0.000     -999.       0.000      -999.
          Parameter not used by the Analytical Model            CONSTANT        0.000     0.000       0.000      0.000
          Parameter not used by the Analytical Model            CONSTANT        0.000     0.000       0.000      0.000
1
```

CHEMICAL SPECIFIC VARIABLES

VARIABLE NAME	UNITS	DISTRIBUTION	PARAMETERS MEAN	PARAMETERS STD DEV	LIMITS MIN	LIMITS MAX
Solid phase decay coefficient	1/yr	CONSTANT	0.000	-999.	0.000	0.100E+11
Dissolved phase decay coefficient	1/yr	CONSTANT	0.000	-999.	0.000	0.100E+11
Overall chemical decay coefficient	1/yr	CONSTANT	0.000	-999.	0.000	0.100E+11
Acid catalyzed hydrolysis rate	l/M-yr	CONSTANT	0.000	-999.	0.000	-999.
Neutral hydrolysis rate constant	1/yr	CONSTANT	0.000	-999.	0.000	-999.
Base catalyzed hydrolysis rate	l/M-yr	CONSTANT	0.000	-999.	0.000	-999.
Reference temperature	C	CONSTANT	25.0	-999.	0.000	100.
Normalized distribution coefficient	ml/g	CONSTANT	0.000	-999.	0.000	-999.
Distribution coefficient	--	DERIVED	-999.	-999.	0.000	0.100E+11
Biodegradation coefficient (sat. zone)	1/yr	CONSTANT	0.000	-999.	0.000	-999.
Air diffusion coefficient	cm2/s	CONSTANT	0.000	-999.	0.000	10.0
Reference temperature for air diffusion	C	CONSTANT	0.000	-999.	0.000	100.
Molecular weight	g/M	CONSTANT	0.000	-999.	0.000	-999.
Mole fraction of solute	--	CONSTANT	0.000	-999.	0.100E-08	1.00
Vapor pressure of solute	mm Hg	CONSTANT	0.000	-999.	0.000	100.
Henry`s law constant	atm-m^3/M	CONSTANT	0.000	-999.	0.100E-09	1.00
Overall 1st order decay sat. zone	1/yr	DERIVED	0.000	0.000	0.000	1.00
Soil/Air Boundary Layer Thickness	cm	CONSTANT	-999.	-999.	0.000	-999.
Not currently used		CONSTANT	-999.	-999.	0.000	1.00

SOURCE SPECIFIC VARIABLES

VARIABLE NAME	UNITS	DISTRIBUTION	PARAMETERS MEAN	PARAMETERS STD DEV	LIMITS MIN	LIMITS MAX
Infiltration rate	m/yr	CONSTANT	0.170E-03	-999.	0.100E-09	0.100E+11
Area of waste disposal unit	m^2	CONSTANT	0.320E+06	-999.	0.100E-01	-999.
Duration of pulse	yr	CONSTANT	0.100E+05	-999.	0.100E-08	-999.
Spread of contaminant source	m	DERIVED	-999.	-999.	0.100E-08	0.100E+11
Recharge rate	m/yr	CONSTANT	0.282E-01	-999.	0.000	0.100E+11
Source decay constant	1/yr	CONSTANT	0.000	-999.	0.000	-999.
Initial concentration at landfill	mg/l	CONSTANT	1.00	-999.	0.000	-999.

Length scale of facility	m	DERIVED	-999.	-999.	0.100E-08	0.100E+11
Width scale of facility	m	DERIVED	-999.	-999.	0.100E-08	0.100E+11
Near field dilution		DERIVED	1.00	0.000	0.000	1.00

1

AQUIFER SPECIFIC VARIABLES

-

VARIABLE NAME	UNITS	DISTRIBUTION	PARAMETERS		LIMITS	
			MEAN	STD DEV	MIN	MAX

-

Particle diameter	cm	CONSTANT	0.25E-01	-999.	0.100E-08	100.
Aquifer porosity	--	CONSTANT	0.100	-999.	0.100E-08	0.990
Bulk density	g/cc	CONSTANT	2.40	-999.	0.100E-01	5.00
Aquifer thickness	m	CONSTANT	91.4	-999.	0.100E-08	0.100E+06
Source thickness (mixing zone depth)	m	DERIVED	-999.	-999.	0.100E-08	0.100E+06
Conductivity (hydraulic)	m/yr	CONSTANT	50.0	-999.	0.100E-06	0.100E+09
Gradient (hydraulic)		CONSTANT	0.110E-01	-999.	0.100E-07	-999.
Groundwater seepage velocity	m/yr	DERIVED	-999.	-999.	0.100E-09	0.100E+09
Retardation coefficient	--	DERIVED	-999.	-999.	1.00	0.100E+09
Longitudinal dispersivity	m	FUNCTION OF X	-999.	-999.	-999.	-999.
Transverse dispersivity	m	FUNCTION OF X	-999.	-999.	-999.	-999.
Vertical dispersivity	m	FUNCTION OF X	-999.	-999.	-999.	-999.
Temperature of aquifer	C	CONSTANT	25.0	-999.	0.000	100.
pH	--	CONSTANT	7.20	-999.	0.300	14.0
Organic carbon content (fraction)		CONSTANT	0.300E-02	-999.	0.100E-05	1.00
Well distance from site	m	CONSTANT	1.00	-999.	1.00	-999.
Angle off center	degree	CONSTANT	0.000	-999.	0.000	360.
Well vertical distance	m	CONSTANT	0.000	-999.	0.000	1.00

1

TIME	CONCENTRATION
0.100E+02	0.00000E+00
0.200E+02	0.00000E+00
0.300E+02	0.00000E+00
0.400E+02	0.00000E+00
0.500E+02	0.00000E+00
0.600E+02	0.00000E+00
0.700E+02	0.00000E+00
0.800E+02	0.00000E+00
0.900E+02	0.00000E+00

0.100E+03	0.00000E+00
0.150E+03	0.00000E+00
0.200E+03	0.00000E+00
0.250E+03	0.00000E+00
0.300E+03	0.00000E+00
0.350E+03	0.00000E+00
0.400E+03	0.00000E+00
0.450E+03	0.00000E+00
0.500E+03	0.20104E-03
0.550E+03	0.50487E-03
0.600E+03	0.84933E-03
0.650E+03	0.15700E-02
0.700E+03	0.22907E-02
0.750E+03	0.30915E-02
0.800E+03	0.37813E-02
0.850E+03	0.39401E-02
0.900E+03	0.40989E-02
0.950E+03	0.42576E-02
0.100E+04	0.44164E-02
0.105E+04	0.45752E-02
0.110E+04	0.47340E-02
0.115E+04	0.48928E-02
0.120E+04	0.50515E-02
0.125E+04	0.52103E-02
0.130E+04	0.53691E-02
0.135E+04	0.55279E-02
0.140E+04	0.56866E-02
0.145E+04	0.58454E-02
0.150E+04	0.60042E-02
0.155E+04	0.61630E-02
0.160E+04	0.63217E-02
0.165E+04	0.64805E-02
0.170E+04	0.66393E-02
0.175E+04	0.67981E-02
0.180E+04	0.69289E-02
0.185E+04	0.69298E-02
0.190E+04	0.69307E-02
0.195E+04	0.69316E-02
0.200E+04	0.69325E-02
0.205E+04	0.69334E-02
0.210E+04	0.69343E-02
0.215E+04	0.69352E-02
0.220E+04	0.69361E-02
0.225E+04	0.69370E-02
0.230E+04	0.69379E-02

0.235E+04	0.69388E-02
0.240E+04	0.69397E-02
0.245E+04	0.69406E-02
0.250E+04	0.69415E-02
0.255E+04	0.69424E-02
0.260E+04	0.69433E-02
0.265E+04	0.69442E-02
0.270E+04	0.69451E-02
0.275E+04	0.69460E-02
0.280E+04	0.69467E-02
0.285E+04	0.69468E-02
0.290E+04	0.69469E-02
0.295E+04	0.69470E-02
0.300E+04	0.69471E-02
0.305E+04	0.69472E-02
0.310E+04	0.69473E-02
0.315E+04	0.69474E-02
0.320E+04	0.69475E-02
0.325E+04	0.69476E-02
0.400E+04	0.69478E-02
0.500E+04	0.69446E-02
0.600E+04	0.69439E-02
0.700E+04	0.69440E-02
0.800E+04	0.69440E-02
0.900E+04	0.69440E-02
0.100E+05	0.61581E-02

```
1
                    U. S.   E N V I R O N M E N T A L   P R O T E C T I O N   A G E N C Y

                                E X P O S U R E   A S S E S S M E N T

                                  M U L T I M E D I A   M O D E L

                              MULTIMED - (Version 2.00 Beta - October 1996)
1
 Run options
 --- -------



 DEFAULT


 DEL RIO LF VERTICAL EXPAN
 Chemical simulated is DEFAULT CHEMICAL


 Option Chosen                        Saturated and unsaturated zone models
 Run was                              DETERMIN
 Infiltration input by user
 Run was transient
 Reject runs if Y coordinate outside plume
 Reject runs if Z coordinate outside plume
 Gaussian source used in saturated zone model
1
1
 UNSATURATED ZONE FLOW MODEL PARAMETERS
 (input parameter description and value)
 NP      - Total number of nodal points                240
 NMAT    - Number of different porous materials          1
 KPROP   - Van Genuchten or Brooks and Corey             1
 IMSHGN  - Spatial discretization option                 1
 NVFLAYR - Number of layers in flow model                1


 OPTIONS CHOSEN
 ------- ------
 Van Genuchten functional coefficients
 User defined coordinate system
1
```

```
Layer information
-----------------
LAYER NO.    LAYER THICKNESS     MATERIAL PROPERTY
---------    ---------------     -----------------
    1                 23.80              1


                                                DATA FOR MATERIAL  1
                                                ---- --- --------
                                            VADOSE ZONE MATERIAL VARIABLES


          ----------------------------------------------------------------------------------------------------------------
-
                     VARIABLE NAME                UNITS      DISTRIBUTION          PARAMETERS              LIMITS
                                                                                  MEAN     STD DEV      MIN         MAX
          ----------------------------------------------------------------------------------------------------------------
-
          Saturated hydraulic conductivity          cm/hr       CONSTANT        0.720E-03 -999.       0.100E-10  0.100E+05
          Unsaturated zone porosity                 --          CONSTANT        0.200     -999.       0.100E-08  0.990
          Air entry pressure head                   m           CONSTANT        0.000     -999.       0.000      -999.
          Depth of the unsaturated zone             m           CONSTANT         23.8     -999.       0.100E-08  -999.


                                                DATA FOR MATERIAL  1
                                                ---- --- --------
                                            VADOSE ZONE FUNCTION VARIABLES


          ----------------------------------------------------------------------------------------------------------------
-
                     VARIABLE NAME                UNITS      DISTRIBUTION          PARAMETERS              LIMITS
                                                                                  MEAN     STD DEV      MIN         MAX
          ----------------------------------------------------------------------------------------------------------------
-
          Residual water content                    --          CONSTANT        0.680E-01 -999.       0.100E-08   1.00
          Brook and Corey exponent,EN               --          CONSTANT        0.000     -999.       0.000       10.0
          ALFA coefficient                         1/cm         CONSTANT        0.800E-02 -999.       0.000       1.00
          Van Genuchten exponent, ENN               --          CONSTANT         1.09     -999.        1.00       5.00
1

 UNSATURATED ZONE TRANSPORT MODEL PARAMETERS

 Currently Not Used in Multimed  Version 2.0             1
```

```
NTSTPS - Number of time values concentration calc       20
DUMMY  - Not presently used                              1
ISOL   - Type of scheme used in unsaturated zone         1
N      - Stehfest terms or number of increments         18
NTEL   - Points in Lagrangian interpolation              3
NGPTS  - Number of Gauss points                        104
NIT    - Convolution integral segments                   2
IBOUND - Type of boundary condition                      2
ITSGEN - Time values generated or input                  1
TMAX   - Max simulation time             --            0.0
WTFUN  - Weighting factor                --            1.2
Used only for Numerical Model            --            0.0
Used only for Numerical Model            --            0.0
Used only for Numerical Model            --            0.0
Used only for Numerical Model            --            0.0
Used only for Numerical Model            --            0.0


OPTIONS CHOSEN
------- ------
Analytical unsaturated zone model
Stehfest numerical inversion algorithm
Nondecaying pulse source
Computer generated times for computing concentrations
1


                                                DATA FOR MATERIAL  1
                                                ---- --- --------
                                                VADOSE TRANSPORT VARIABLES


          ----------------------------------------------------------------------------------------------------------------
-
                     VARIABLE NAME                UNITS      DISTRIBUTION          PARAMETERS              LIMITS
                                                                                   MEAN     STD DEV      MIN         MAX
          ----------------------------------------------------------------------------------------------------------------
-
          Longitudinal dispersivity of material      m          DERIVED         -999.     -999.       0.100E-02  0.100E+05
          Percent organic matter                    --          CONSTANT         1.34     -999.       0.000       100.
          Bulk density of soil for material         g/cc        CONSTANT         1.30     -999.       0.100E-01   5.00
          Biological decay coefficient            1/yr          CONSTANT        0.000     -999.       0.000      -999.
          Parameter not used by the Analytical Model            CONSTANT        0.000     0.000       0.000      0.000
          Parameter not used by the Analytical Model            CONSTANT        0.000     0.000       0.000      0.000
1
```

CHEMICAL SPECIFIC VARIABLES

VARIABLE NAME	UNITS	DISTRIBUTION	PARAMETERS MEAN	PARAMETERS STD DEV	LIMITS MIN	LIMITS MAX
Solid phase decay coefficient	1/yr	CONSTANT	0.000	-999.	0.000	0.100E+11
Dissolved phase decay coefficient	1/yr	CONSTANT	0.000	-999.	0.000	0.100E+11
Overall chemical decay coefficient	1/yr	CONSTANT	0.000	-999.	0.000	0.100E+11
Acid catalyzed hydrolysis rate	l/M-yr	CONSTANT	0.000	-999.	0.000	-999.
Neutral hydrolysis rate constant	1/yr	CONSTANT	0.000	-999.	0.000	-999.
Base catalyzed hydrolysis rate	l/M-yr	CONSTANT	0.000	-999.	0.000	-999.
Reference temperature	C	CONSTANT	25.0	-999.	0.000	100.
Normalized distribution coefficient	ml/g	CONSTANT	0.000	-999.	0.000	-999.
Distribution coefficient	--	DERIVED	-999.	-999.	0.000	0.100E+11
Biodegradation coefficient (sat. zone)	1/yr	CONSTANT	0.000	-999.	0.000	-999.
Air diffusion coefficient	cm2/s	CONSTANT	0.000	-999.	0.000	10.0
Reference temperature for air diffusion	C	CONSTANT	0.000	-999.	0.000	100.
Molecular weight	g/M	CONSTANT	0.000	-999.	0.000	-999.
Mole fraction of solute	--	CONSTANT	0.000	-999.	0.100E-08	1.00
Vapor pressure of solute	mm Hg	CONSTANT	0.000	-999.	0.000	100.
Henry`s law constant	atm-m^3/M	CONSTANT	0.000	-999.	0.100E-09	1.00
Overall 1st order decay sat. zone	1/yr	DERIVED	0.000	0.000	0.000	1.00
Soil/Air Boundary Layer Thickness	cm	CONSTANT	-999.	-999.	0.000	-999.
Not currently used		CONSTANT	-999.	-999.	0.000	1.00

SOURCE SPECIFIC VARIABLES

VARIABLE NAME	UNITS	DISTRIBUTION	PARAMETERS MEAN	PARAMETERS STD DEV	LIMITS MIN	LIMITS MAX
Infiltration rate	m/yr	CONSTANT	0.170E-03	-999.	0.100E-09	0.100E+11
Area of waste disposal unit	m^2	CONSTANT	0.320E+06	-999.	0.100E-01	-999.
Duration of pulse	yr	CONSTANT	0.100E+05	-999.	0.100E-08	-999.
Spread of contaminant source	m	DERIVED	-999.	-999.	0.100E-08	0.100E+11
Recharge rate	m/yr	CONSTANT	0.282E-01	-999.	0.000	0.100E+11
Source decay constant	1/yr	CONSTANT	0.000	-999.	0.000	-999.
Initial concentration at landfill	mg/l	CONSTANT	1.00	-999.	0.000	-999.

Length scale of facility	m	DERIVED	-999.	-999.	0.100E-08	0.100E+11
Width scale of facility	m	DERIVED	-999.	-999.	0.100E-08	0.100E+11
Near field dilution		DERIVED	1.00	0.000	0.000	1.00

1

AQUIFER SPECIFIC VARIABLES

-

VARIABLE NAME	UNITS	DISTRIBUTION	PARAMETERS MEAN	PARAMETERS STD DEV	LIMITS MIN	LIMITS MAX
Particle diameter	cm	CONSTANT	0.25E-01	-999.	0.100E-08	100.
Aquifer porosity	--	CONSTANT	0.100	-999.	0.100E-08	0.990
Bulk density	g/cc	CONSTANT	2.40	-999.	0.100E-01	5.00
Aquifer thickness	m	CONSTANT	91.4	-999.	0.100E-08	0.100E+06
Source thickness (mixing zone depth)	m	DERIVED	-999.	-999.	0.100E-08	0.100E+06
Conductivity (hydraulic)	m/yr	CONSTANT	50.0	-999.	0.100E-06	0.100E+09
Gradient (hydraulic)		CONSTANT	0.110E-01	-999.	0.100E-07	-999.
Groundwater seepage velocity	m/yr	DERIVED	-999.	-999.	0.100E-09	0.100E+09
Retardation coefficient	--	DERIVED	-999.	-999.	1.00	0.100E+09
Longitudinal dispersivity	m	FUNCTION OF X	-999.	-999.	-999.	-999.
Transverse dispersivity	m	FUNCTION OF X	-999.	-999.	-999.	-999.
Vertical dispersivity	m	FUNCTION OF X	-999.	-999.	-999.	-999.
Temperature of aquifer	C	CONSTANT	25.0	-999.	0.000	100.
pH	--	CONSTANT	7.20	-999.	0.300	14.0
Organic carbon content (fraction)		CONSTANT	0.300E-02	-999.	0.100E-05	1.00
Well distance from site	m	CONSTANT	1.00	-999.	1.00	-999.
Angle off center	degree	CONSTANT	0.000	-999.	0.000	360.
Well vertical distance	m	CONSTANT	0.000	-999.	0.000	1.00

1

TIME	CONCENTRATION
0.100E+02	0.00000E+00
0.200E+02	0.00000E+00
0.300E+02	0.00000E+00
0.400E+02	0.00000E+00
0.500E+02	0.00000E+00
0.600E+02	0.00000E+00
0.700E+02	0.00000E+00
0.800E+02	0.00000E+00
0.900E+02	0.00000E+00

0.100E+03	0.00000E+00
0.150E+03	0.00000E+00
0.200E+03	0.00000E+00
0.250E+03	0.00000E+00
0.300E+03	0.00000E+00
0.350E+03	0.00000E+00
0.400E+03	0.00000E+00
0.450E+03	0.00000E+00
0.500E+03	0.00000E+00
0.550E+03	0.00000E+00
0.600E+03	0.00000E+00
0.650E+03	0.00000E+00
0.700E+03	0.00000E+00
0.750E+03	0.00000E+00
0.800E+03	0.00000E+00
0.850E+03	0.00000E+00
0.900E+03	0.00000E+00
0.950E+03	0.00000E+00
0.100E+04	0.00000E+00
0.105E+04	0.00000E+00
0.110E+04	0.00000E+00
0.115E+04	0.00000E+00
0.120E+04	0.00000E+00
0.125E+04	0.00000E+00
0.130E+04	0.00000E+00
0.135E+04	0.00000E+00
0.140E+04	0.00000E+00
0.145E+04	0.00000E+00
0.150E+04	0.00000E+00
0.155E+04	0.00000E+00
0.160E+04	0.00000E+00
0.165E+04	0.00000E+00
0.170E+04	0.00000E+00
0.175E+04	0.00000E+00
0.180E+04	0.00000E+00
0.185E+04	0.00000E+00
0.190E+04	0.00000E+00
0.195E+04	0.00000E+00
0.200E+04	0.00000E+00
0.205E+04	0.00000E+00
0.210E+04	0.00000E+00
0.215E+04	0.00000E+00
0.220E+04	0.00000E+00
0.225E+04	0.00000E+00
0.230E+04	0.00000E+00

0.235E+04	0.00000E+00
0.240E+04	0.00000E+00
0.245E+04	0.00000E+00
0.250E+04	0.00000E+00
0.255E+04	0.00000E+00
0.260E+04	0.00000E+00
0.265E+04	0.00000E+00
0.270E+04	0.00000E+00
0.275E+04	0.00000E+00
0.280E+04	0.00000E+00
0.285E+04	0.00000E+00
0.290E+04	0.00000E+00
0.295E+04	0.00000E+00
0.300E+04	0.00000E+00
0.305E+04	0.00000E+00
0.310E+04	0.00000E+00
0.315E+04	0.00000E+00
0.320E+04	0.00000E+00
0.325E+04	0.00000E+00
0.400E+04	0.00000E+00
0.500E+04	0.00000E+00
0.600E+04	0.00000E+00
0.700E+04	0.00000E+00
0.800E+04	0.00000E+00
0.900E+04	0.00000E+00
0.100E+05	0.00000E+00

```
1
                    U. S.   E N V I R O N M E N T A L   P R O T E C T I O N   A G E N C Y

                                E X P O S U R E   A S S E S S M E N T

                                  M U L T I M E D I A   M O D E L

                              MULTIMED - (Version 2.00 Beta - October 1996)
1
 Run options
 --- -------



 DEFAULT


 DEL RIO LF VERTICAL EXPAN
 Chemical simulated is DEFAULT CHEMICAL


 Option Chosen                        Saturated and unsaturated zone models
 Run was                              DETERMIN
 Infiltration input by user
 Run was transient
 Reject runs if Y coordinate outside plume
 Reject runs if Z coordinate outside plume
 Gaussian source used in saturated zone model
1
1
 UNSATURATED ZONE FLOW MODEL PARAMETERS
 (input parameter description and value)
 NP      - Total number of nodal points                240
 NMAT    - Number of different porous materials          1
 KPROP   - Van Genuchten or Brooks and Corey             1
 IMSHGN  - Spatial discretization option                 1
 NVFLAYR - Number of layers in flow model                1


 OPTIONS CHOSEN
 ------- ------
 Van Genuchten functional coefficients
 User defined coordinate system
1
```

```
Layer information
-----------------
LAYER NO.    LAYER THICKNESS     MATERIAL PROPERTY
---------    ---------------     -----------------
    1                 15.00             1


                                                DATA FOR MATERIAL  1
                                                ---- --- --------
                                            VADOSE ZONE MATERIAL VARIABLES


          ----------------------------------------------------------------------------------------------------------------
-
                     VARIABLE NAME                UNITS      DISTRIBUTION          PARAMETERS              LIMITS
                                                                                  MEAN     STD DEV      MIN         MAX
          ----------------------------------------------------------------------------------------------------------------
-
          Saturated hydraulic conductivity          cm/hr       CONSTANT        0.720E-03 -999.       0.100E-10  0.100E+05
          Unsaturated zone porosity                 --          CONSTANT        0.200E-01 -999.       0.100E-08  0.990
          Air entry pressure head                   m           CONSTANT        0.000     -999.       0.000      -999.
          Depth of the unsaturated zone             m           CONSTANT         15.0     -999.       0.100E-08  -999.


                                                DATA FOR MATERIAL  1
                                                ---- --- --------
                                            VADOSE ZONE FUNCTION VARIABLES


          ----------------------------------------------------------------------------------------------------------------
-
                     VARIABLE NAME                UNITS      DISTRIBUTION          PARAMETERS              LIMITS
                                                                                  MEAN     STD DEV      MIN         MAX
          ----------------------------------------------------------------------------------------------------------------
-
          Residual water content                    --          CONSTANT        0.680E-01 -999.       0.100E-08   1.00
          Brook and Corey exponent,EN               --          CONSTANT        0.000     -999.       0.000       10.0
          ALFA coefficient                         1/cm         CONSTANT        0.800E-02 -999.       0.000       1.00
          Van Genuchten exponent, ENN               --          CONSTANT         1.09     -999.        1.00       5.00
1

 UNSATURATED ZONE TRANSPORT MODEL PARAMETERS

 Currently Not Used in Multimed  Version 2.0             1
```

```
NTSTPS - Number of time values concentration calc       20
DUMMY  - Not presently used                              1
ISOL   - Type of scheme used in unsaturated zone         1
N      - Stehfest terms or number of increments         18
NTEL   - Points in Lagrangian interpolation              3
NGPTS  - Number of Gauss points                        104
NIT    - Convolution integral segments                   2
IBOUND - Type of boundary condition                      2
ITSGEN - Time values generated or input                  1
TMAX   - Max simulation time             --            0.0
WTFUN  - Weighting factor                --            1.2
Used only for Numerical Model            --            0.0
Used only for Numerical Model            --            0.0
Used only for Numerical Model            --            0.0
Used only for Numerical Model            --            0.0
Used only for Numerical Model            --            0.0


OPTIONS CHOSEN
------- ------
Analytical unsaturated zone model
Stehfest numerical inversion algorithm
Nondecaying pulse source
Computer generated times for computing concentrations
1


                                                DATA FOR MATERIAL  1
                                                ---- --- --------
                                                VADOSE TRANSPORT VARIABLES


          ---------------------------------------------------------------------------------------------------------------
-
                     VARIABLE NAME                UNITS      DISTRIBUTION          PARAMETERS              LIMITS
                                                                                   MEAN     STD DEV      MIN         MAX
          ---------------------------------------------------------------------------------------------------------------
-
          Longitudinal dispersivity of material      m          DERIVED         -999.     -999.       0.100E-02  0.100E+05
          Percent organic matter                    --          CONSTANT         1.34     -999.       0.000       100.
          Bulk density of soil for material         g/cc        CONSTANT         1.30     -999.       0.100E-01   5.00
          Biological decay coefficient            1/yr          CONSTANT        0.000     -999.       0.000      -999.
          Parameter not used by the Analytical Model            CONSTANT        0.000     0.000       0.000      0.000
          Parameter not used by the Analytical Model            CONSTANT        0.000     0.000       0.000      0.000
1
```

CHEMICAL SPECIFIC VARIABLES

VARIABLE NAME	UNITS	DISTRIBUTION	PARAMETERS MEAN	PARAMETERS STD DEV	LIMITS MIN	LIMITS MAX
Solid phase decay coefficient	1/yr	CONSTANT	0.000	-999.	0.000	0.100E+11
Dissolved phase decay coefficient	1/yr	CONSTANT	0.000	-999.	0.000	0.100E+11
Overall chemical decay coefficient	1/yr	CONSTANT	0.000	-999.	0.000	0.100E+11
Acid catalyzed hydrolysis rate	l/M-yr	CONSTANT	0.000	-999.	0.000	-999.
Neutral hydrolysis rate constant	1/yr	CONSTANT	0.000	-999.	0.000	-999.
Base catalyzed hydrolysis rate	l/M-yr	CONSTANT	0.000	-999.	0.000	-999.
Reference temperature	C	CONSTANT	25.0	-999.	0.000	100.
Normalized distribution coefficient	ml/g	CONSTANT	0.000	-999.	0.000	-999.
Distribution coefficient	--	DERIVED	-999.	-999.	0.000	0.100E+11
Biodegradation coefficient (sat. zone)	1/yr	CONSTANT	0.000	-999.	0.000	-999.
Air diffusion coefficient	cm2/s	CONSTANT	0.000	-999.	0.000	10.0
Reference temperature for air diffusion	C	CONSTANT	0.000	-999.	0.000	100.
Molecular weight	g/M	CONSTANT	0.000	-999.	0.000	-999.
Mole fraction of solute	--	CONSTANT	0.000	-999.	0.100E-08	1.00
Vapor pressure of solute	mm Hg	CONSTANT	0.000	-999.	0.000	100.
Henry`s law constant	atm-m^3/M	CONSTANT	0.000	-999.	0.100E-09	1.00
Overall 1st order decay sat. zone	1/yr	DERIVED	0.000	0.000	0.000	1.00
Soil/Air Boundary Layer Thickness	cm	CONSTANT	-999.	-999.	0.000	-999.
Not currently used		CONSTANT	-999.	-999.	0.000	1.00

SOURCE SPECIFIC VARIABLES

VARIABLE NAME	UNITS	DISTRIBUTION	PARAMETERS MEAN	PARAMETERS STD DEV	LIMITS MIN	LIMITS MAX
Infiltration rate	m/yr	CONSTANT	0.170E-03	-999.	0.100E-09	0.100E+11
Area of waste disposal unit	m^2	CONSTANT	0.320E+06	-999.	0.100E-01	-999.
Duration of pulse	yr	CONSTANT	0.100E+05	-999.	0.100E-08	-999.
Spread of contaminant source	m	DERIVED	-999.	-999.	0.100E-08	0.100E+11
Recharge rate	m/yr	CONSTANT	0.282E-01	-999.	0.000	0.100E+11
Source decay constant	1/yr	CONSTANT	0.000	-999.	0.000	-999.
Initial concentration at landfill	mg/l	CONSTANT	1.00	-999.	0.000	-999.

Length scale of facility	m	DERIVED	-999.	-999.	0.100E-08	0.100E+11
Width scale of facility	m	DERIVED	-999.	-999.	0.100E-08	0.100E+11
Near field dilution		DERIVED	1.00	0.000	0.000	1.00

1

AQUIFER SPECIFIC VARIABLES

-

VARIABLE NAME	UNITS	DISTRIBUTION	PARAMETERS		LIMITS	
			MEAN	STD DEV	MIN	MAX

-

Particle diameter	cm	CONSTANT	0.25E-01	-999.	0.100E-08	100.
Aquifer porosity	--	CONSTANT	0.100	-999.	0.100E-08	0.990
Bulk density	g/cc	CONSTANT	2.40	-999.	0.100E-01	5.00
Aquifer thickness	m	CONSTANT	91.4	-999.	0.100E-08	0.100E+06
Source thickness (mixing zone depth)	m	DERIVED	-999.	-999.	0.100E-08	0.100E+06
Conductivity (hydraulic)	m/yr	CONSTANT	50.0	-999.	0.100E-06	0.100E+09
Gradient (hydraulic)		CONSTANT	0.110E-01	-999.	0.100E-07	-999.
Groundwater seepage velocity	m/yr	DERIVED	-999.	-999.	0.100E-09	0.100E+09
Retardation coefficient	--	DERIVED	-999.	-999.	1.00	0.100E+09
Longitudinal dispersivity	m	FUNCTION OF X	-999.	-999.	-999.	-999.
Transverse dispersivity	m	FUNCTION OF X	-999.	-999.	-999.	-999.
Vertical dispersivity	m	FUNCTION OF X	-999.	-999.	-999.	-999.
Temperature of aquifer	C	CONSTANT	25.0	-999.	0.000	100.
pH	--	CONSTANT	7.20	-999.	0.300	14.0
Organic carbon content (fraction)		CONSTANT	0.300E-02	-999.	0.100E-05	1.00
Well distance from site	m	CONSTANT	1.00	-999.	1.00	-999.
Angle off center	degree	CONSTANT	0.000	-999.	0.000	360.
Well vertical distance	m	CONSTANT	0.000	-999.	0.000	1.00

1

TIME	CONCENTRATION
0.100E+02	0.00000E+00
0.200E+02	0.00000E+00
0.300E+02	0.00000E+00
0.400E+02	0.00000E+00
0.500E+02	0.00000E+00
0.600E+02	0.00000E+00
0.700E+02	0.00000E+00
0.800E+02	0.00000E+00
0.900E+02	0.00000E+00

0.100E+03	0.00000E+00
0.150E+03	0.00000E+00
0.200E+03	0.00000E+00
0.250E+03	0.00000E+00
0.300E+03	0.00000E+00
0.350E+03	0.00000E+00
0.400E+03	0.00000E+00
0.450E+03	0.00000E+00
0.500E+03	0.00000E+00
0.550E+03	0.00000E+00
0.600E+03	0.00000E+00
0.650E+03	0.00000E+00
0.700E+03	0.00000E+00
0.750E+03	0.00000E+00
0.800E+03	0.19454E-06
0.850E+03	0.58882E-06
0.900E+03	0.98310E-06
0.950E+03	0.13774E-05
0.100E+04	0.17717E-05
0.105E+04	0.21660E-05
0.110E+04	0.25602E-05
0.115E+04	0.29545E-05
0.120E+04	0.80333E-04
0.125E+04	0.19868E-03
0.130E+04	0.31703E-03
0.135E+04	0.43538E-03
0.140E+04	0.55373E-03
0.145E+04	0.67208E-03
0.150E+04	0.81004E-03
0.155E+04	0.10936E-02
0.160E+04	0.13771E-02
0.165E+04	0.16607E-02
0.170E+04	0.19442E-02
0.175E+04	0.22278E-02
0.180E+04	0.25337E-02
0.185E+04	0.28506E-02
0.190E+04	0.31674E-02
0.195E+04	0.34843E-02
0.200E+04	0.37789E-02
0.205E+04	0.39323E-02
0.210E+04	0.40858E-02
0.215E+04	0.42392E-02
0.220E+04	0.43927E-02
0.225E+04	0.45462E-02
0.230E+04	0.46996E-02

0.235E+04	0.48531E-02
0.240E+04	0.50065E-02
0.245E+04	0.51600E-02
0.250E+04	0.53134E-02
0.255E+04	0.54669E-02
0.260E+04	0.56204E-02
0.265E+04	0.57738E-02
0.270E+04	0.59273E-02
0.275E+04	0.60807E-02
0.280E+04	0.62342E-02
0.285E+04	0.63877E-02
0.290E+04	0.65411E-02
0.295E+04	0.66946E-02
0.300E+04	0.68280E-02
0.305E+04	0.68346E-02
0.310E+04	0.68413E-02
0.315E+04	0.68479E-02
0.320E+04	0.68545E-02
0.325E+04	0.68611E-02
0.400E+04	0.69593E-02
0.500E+04	0.69239E-02
0.600E+04	0.69361E-02
0.700E+04	0.69482E-02
0.800E+04	0.69520E-02
0.900E+04	0.69514E-02
0.100E+05	0.69496E-02

```
1
                    U. S.   E N V I R O N M E N T A L   P R O T E C T I O N   A G E N C Y

                                E X P O S U R E   A S S E S S M E N T

                                  M U L T I M E D I A   M O D E L

                              MULTIMED - (Version 2.00 Beta - October 1996)
1
 Run options
 --- -------



 DEFAULT


 DEL RIO LF VERTICAL EXPAN
 Chemical simulated is DEFAULT CHEMICAL


 Option Chosen                        Saturated and unsaturated zone models
 Run was                              DETERMIN
 Infiltration input by user
 Run was transient
 Reject runs if Y coordinate outside plume
 Reject runs if Z coordinate outside plume
 Gaussian source used in saturated zone model
1
1
 UNSATURATED ZONE FLOW MODEL PARAMETERS
 (input parameter description and value)
 NP      - Total number of nodal points                240
 NMAT    - Number of different porous materials          1
 KPROP   - Van Genuchten or Brooks and Corey             1
 IMSHGN  - Spatial discretization option                 1
 NVFLAYR - Number of layers in flow model                1


 OPTIONS CHOSEN
 ------- ------
 Van Genuchten functional coefficients
 User defined coordinate system
1
```

```
Layer information
-----------------
LAYER NO.    LAYER THICKNESS     MATERIAL PROPERTY
---------    ---------------     -----------------
    1                  5.00             1


                                                DATA FOR MATERIAL  1
                                                ---- --- --------
                                            VADOSE ZONE MATERIAL VARIABLES


          ----------------------------------------------------------------------------------------------------------------
-
                     VARIABLE NAME                UNITS      DISTRIBUTION          PARAMETERS              LIMITS
                                                                                  MEAN     STD DEV      MIN         MAX
          ----------------------------------------------------------------------------------------------------------------
-
          Saturated hydraulic conductivity          cm/hr       CONSTANT        0.720E-03 -999.       0.100E-10  0.100E+05
          Unsaturated zone porosity                 --          CONSTANT        0.200E-01 -999.       0.100E-08  0.990
          Air entry pressure head                   m           CONSTANT        0.000     -999.       0.000      -999.
          Depth of the unsaturated zone             m           CONSTANT         5.00     -999.       0.100E-08  -999.


                                                DATA FOR MATERIAL  1
                                                ---- --- --------
                                            VADOSE ZONE FUNCTION VARIABLES


          ----------------------------------------------------------------------------------------------------------------
-
                     VARIABLE NAME                UNITS      DISTRIBUTION          PARAMETERS              LIMITS
                                                                                  MEAN     STD DEV      MIN         MAX
          ----------------------------------------------------------------------------------------------------------------
-
          Residual water content                    --          CONSTANT        0.680E-01 -999.       0.100E-08   1.00
          Brook and Corey exponent,EN               --          CONSTANT        0.000     -999.       0.000       10.0
          ALFA coefficient                         1/cm         CONSTANT        0.800E-02 -999.       0.000       1.00
          Van Genuchten exponent, ENN               --          CONSTANT         1.09     -999.        1.00       5.00
1

 UNSATURATED ZONE TRANSPORT MODEL PARAMETERS

 Currently Not Used in Multimed  Version 2.0             1
```

```
NTSTPS - Number of time values concentration calc       20
DUMMY  - Not presently used                              1
ISOL   - Type of scheme used in unsaturated zone         1
N      - Stehfest terms or number of increments         18
NTEL   - Points in Lagrangian interpolation              3
NGPTS  - Number of Gauss points                        104
NIT    - Convolution integral segments                   2
IBOUND - Type of boundary condition                      2
ITSGEN - Time values generated or input                  1
TMAX   - Max simulation time             --            0.0
WTFUN  - Weighting factor                --            1.2
Used only for Numerical Model            --            0.0
Used only for Numerical Model            --            0.0
Used only for Numerical Model            --            0.0
Used only for Numerical Model            --            0.0
Used only for Numerical Model            --            0.0


OPTIONS CHOSEN
------- ------
Analytical unsaturated zone model
Stehfest numerical inversion algorithm
Nondecaying pulse source
Computer generated times for computing concentrations
1


                                                DATA FOR MATERIAL  1
                                                ---- --- --------
                                                VADOSE TRANSPORT VARIABLES


          ---------------------------------------------------------------------------------------------------------------
-
                     VARIABLE NAME                UNITS      DISTRIBUTION          PARAMETERS              LIMITS
                                                                                  MEAN     STD DEV      MIN         MAX
          ---------------------------------------------------------------------------------------------------------------
-
          Longitudinal dispersivity of material      m          DERIVED         -999.     -999.       0.100E-02  0.100E+05
          Percent organic matter                    --          CONSTANT         1.34     -999.       0.000       100.
          Bulk density of soil for material         g/cc        CONSTANT         1.30     -999.       0.100E-01   5.00
          Biological decay coefficient            1/yr          CONSTANT        0.000     -999.       0.000      -999.
          Parameter not used by the Analytical Model            CONSTANT        0.000     0.000       0.000      0.000
          Parameter not used by the Analytical Model            CONSTANT        0.000     0.000       0.000      0.000
1
```

CHEMICAL SPECIFIC VARIABLES

VARIABLE NAME	UNITS	DISTRIBUTION	PARAMETERS MEAN	PARAMETERS STD DEV	LIMITS MIN	LIMITS MAX
Solid phase decay coefficient	1/yr	CONSTANT	0.000	-999.	0.000	0.100E+11
Dissolved phase decay coefficient	1/yr	CONSTANT	0.000	-999.	0.000	0.100E+11
Overall chemical decay coefficient	1/yr	CONSTANT	0.000	-999.	0.000	0.100E+11
Acid catalyzed hydrolysis rate	l/M-yr	CONSTANT	0.000	-999.	0.000	-999.
Neutral hydrolysis rate constant	1/yr	CONSTANT	0.000	-999.	0.000	-999.
Base catalyzed hydrolysis rate	l/M-yr	CONSTANT	0.000	-999.	0.000	-999.
Reference temperature	C	CONSTANT	25.0	-999.	0.000	100.
Normalized distribution coefficient	ml/g	CONSTANT	0.000	-999.	0.000	-999.
Distribution coefficient	--	DERIVED	-999.	-999.	0.000	0.100E+11
Biodegradation coefficient (sat. zone)	1/yr	CONSTANT	0.000	-999.	0.000	-999.
Air diffusion coefficient	cm2/s	CONSTANT	0.000	-999.	0.000	10.0
Reference temperature for air diffusion	C	CONSTANT	0.000	-999.	0.000	100.
Molecular weight	g/M	CONSTANT	0.000	-999.	0.000	-999.
Mole fraction of solute	--	CONSTANT	0.000	-999.	0.100E-08	1.00
Vapor pressure of solute	mm Hg	CONSTANT	0.000	-999.	0.000	100.
Henry`s law constant	atm-m^3/M	CONSTANT	0.000	-999.	0.100E-09	1.00
Overall 1st order decay sat. zone	1/yr	DERIVED	0.000	0.000	0.000	1.00
Soil/Air Boundary Layer Thickness	cm	CONSTANT	-999.	-999.	0.000	-999.
Not currently used		CONSTANT	-999.	-999.	0.000	1.00

1

SOURCE SPECIFIC VARIABLES

VARIABLE NAME	UNITS	DISTRIBUTION	PARAMETERS MEAN	PARAMETERS STD DEV	LIMITS MIN	LIMITS MAX
Infiltration rate	m/yr	CONSTANT	0.170E-03	-999.	0.100E-09	0.100E+11
Area of waste disposal unit	m^2	CONSTANT	0.320E+06	-999.	0.100E-01	-999.
Duration of pulse	yr	CONSTANT	0.100E+05	-999.	0.100E-08	-999.
Spread of contaminant source	m	DERIVED	-999.	-999.	0.100E-08	0.100E+11
Recharge rate	m/yr	CONSTANT	0.282E-01	-999.	0.000	0.100E+11
Source decay constant	1/yr	CONSTANT	0.000	-999.	0.000	-999.
Initial concentration at landfill	mg/l	CONSTANT	1.00	-999.	0.000	-999.

Length scale of facility	m	DERIVED	-999.	-999.	0.100E-08	0.100E+11
Width scale of facility	m	DERIVED	-999.	-999.	0.100E-08	0.100E+11
Near field dilution		DERIVED	1.00	0.000	0.000	1.00

1

AQUIFER SPECIFIC VARIABLES

-

VARIABLE NAME	UNITS	DISTRIBUTION	PARAMETERS MEAN	PARAMETERS STD DEV	LIMITS MIN	LIMITS MAX
Particle diameter	cm	CONSTANT	0.25E-01	-999.	0.100E-08	100.
Aquifer porosity	--	CONSTANT	0.100	-999.	0.100E-08	0.990
Bulk density	g/cc	CONSTANT	2.40	-999.	0.100E-01	5.00
Aquifer thickness	m	CONSTANT	91.4	-999.	0.100E-08	0.100E+06
Source thickness (mixing zone depth)	m	DERIVED	-999.	-999.	0.100E-08	0.100E+06
Conductivity (hydraulic)	m/yr	CONSTANT	50.0	-999.	0.100E-06	0.100E+09
Gradient (hydraulic)		CONSTANT	0.110E-01	-999.	0.100E-07	-999.
Groundwater seepage velocity	m/yr	DERIVED	-999.	-999.	0.100E-09	0.100E+09
Retardation coefficient	--	DERIVED	-999.	-999.	1.00	0.100E+09
Longitudinal dispersivity	m	FUNCTION OF X	-999.	-999.	-999.	-999.
Transverse dispersivity	m	FUNCTION OF X	-999.	-999.	-999.	-999.
Vertical dispersivity	m	FUNCTION OF X	-999.	-999.	-999.	-999.
Temperature of aquifer	C	CONSTANT	25.0	-999.	0.000	100.
pH	--	CONSTANT	7.20	-999.	0.300	14.0
Organic carbon content (fraction)		CONSTANT	0.300E-02	-999.	0.100E-05	1.00
Well distance from site	m	CONSTANT	1.00	-999.	1.00	-999.
Angle off center	degree	CONSTANT	0.000	-999.	0.000	360.
Well vertical distance	m	CONSTANT	0.000	-999.	0.000	1.00

1

TIME	CONCENTRATION
0.100E+02	0.00000E+00
0.200E+02	0.00000E+00
0.300E+02	0.00000E+00
0.400E+02	0.00000E+00
0.500E+02	0.00000E+00
0.600E+02	0.00000E+00
0.700E+02	0.00000E+00
0.800E+02	0.00000E+00
0.900E+02	0.00000E+00

0.100E+03	0.00000E+00
0.150E+03	0.00000E+00
0.200E+03	0.00000E+00
0.250E+03	0.23220E-05
0.300E+03	0.88334E-05
0.350E+03	0.15345E-04
0.400E+03	0.22855E-03
0.450E+03	0.55749E-03
0.500E+03	0.10745E-02
0.550E+03	0.19010E-02
0.600E+03	0.27780E-02
0.650E+03	0.37071E-02
0.700E+03	0.39259E-02
0.750E+03	0.40836E-02
0.800E+03	0.42413E-02
0.850E+03	0.43989E-02
0.900E+03	0.45566E-02
0.950E+03	0.47143E-02
0.100E+04	0.48720E-02
0.105E+04	0.50296E-02
0.110E+04	0.51873E-02
0.115E+04	0.53450E-02
0.120E+04	0.55026E-02
0.125E+04	0.56603E-02
0.130E+04	0.58180E-02
0.135E+04	0.59757E-02
0.140E+04	0.61333E-02
0.145E+04	0.62910E-02
0.150E+04	0.64487E-02
0.155E+04	0.66064E-02
0.160E+04	0.67640E-02
0.165E+04	0.69217E-02
0.170E+04	0.69353E-02
0.175E+04	0.69366E-02
0.180E+04	0.69378E-02
0.185E+04	0.69391E-02
0.190E+04	0.69403E-02
0.195E+04	0.69415E-02
0.200E+04	0.69428E-02
0.205E+04	0.69440E-02
0.210E+04	0.69452E-02
0.215E+04	0.69465E-02
0.220E+04	0.69477E-02
0.225E+04	0.69490E-02
0.230E+04	0.69502E-02

0.235E+04	0.69514E-02
0.240E+04	0.69527E-02
0.245E+04	0.69539E-02
0.250E+04	0.69551E-02
0.255E+04	0.69564E-02
0.260E+04	0.69576E-02
0.265E+04	0.69589E-02
0.270E+04	0.69588E-02
0.275E+04	0.69586E-02
0.280E+04	0.69584E-02
0.285E+04	0.69583E-02
0.290E+04	0.69581E-02
0.295E+04	0.69579E-02
0.300E+04	0.69577E-02
0.305E+04	0.69575E-02
0.310E+04	0.69574E-02
0.315E+04	0.69572E-02
0.320E+04	0.69570E-02
0.325E+04	0.69568E-02
0.400E+04	0.69547E-02
0.500E+04	0.69535E-02
0.600E+04	0.69536E-02
0.700E+04	0.69536E-02
0.800E+04	0.69536E-02
0.900E+04	0.69536E-02
0.100E+05	0.56451E-02

```
1
                    U. S.   E N V I R O N M E N T A L   P R O T E C T I O N   A G E N C Y

                                E X P O S U R E   A S S E S S M E N T

                                  M U L T I M E D I A   M O D E L

                              MULTIMED - (Version 2.00 Beta - October 1996)
1
 Run options
 --- -------



 DEFAULT


 DEL RIO LF VERTICAL EXPAN
 Chemical simulated is DEFAULT CHEMICAL


 Option Chosen                        Saturated and unsaturated zone models
 Run was                              DETERMIN
 Infiltration input by user
 Run was transient
 Reject runs if Y coordinate outside plume
 Reject runs if Z coordinate outside plume
 Gaussian source used in saturated zone model
1
1
 UNSATURATED ZONE FLOW MODEL PARAMETERS
 (input parameter description and value)
 NP      - Total number of nodal points                240
 NMAT    - Number of different porous materials          1
 KPROP   - Van Genuchten or Brooks and Corey             1
 IMSHGN  - Spatial discretization option                 1
 NVFLAYR - Number of layers in flow model                1


 OPTIONS CHOSEN
 ------- ------
 Van Genuchten functional coefficients
 User defined coordinate system
1
```

```
Layer information
-----------------
LAYER NO.    LAYER THICKNESS     MATERIAL PROPERTY
---------    ---------------     -----------------
    1                 23.80             1


                                                DATA FOR MATERIAL  1
                                                ---- --- --------
                                            VADOSE ZONE MATERIAL VARIABLES


          ----------------------------------------------------------------------------------------------------------------
-
                     VARIABLE NAME                UNITS      DISTRIBUTION          PARAMETERS              LIMITS
                                                                                  MEAN     STD DEV      MIN         MAX
          ----------------------------------------------------------------------------------------------------------------
-
          Saturated hydraulic conductivity          cm/hr       CONSTANT        0.720E-03 -999.       0.100E-10  0.100E+05
          Unsaturated zone porosity                 --          CONSTANT        0.200E-01 -999.       0.100E-08  0.990
          Air entry pressure head                   m           CONSTANT        0.000     -999.       0.000      -999.
          Depth of the unsaturated zone             m           CONSTANT         23.8     -999.       0.100E-08  -999.


                                                DATA FOR MATERIAL  1
                                                ---- --- --------
                                            VADOSE ZONE FUNCTION VARIABLES


          ----------------------------------------------------------------------------------------------------------------
-
                     VARIABLE NAME                UNITS      DISTRIBUTION          PARAMETERS              LIMITS
                                                                                  MEAN     STD DEV      MIN         MAX
          ----------------------------------------------------------------------------------------------------------------
-
          Residual water content                    --          CONSTANT        0.680E-01 -999.       0.100E-08   1.00
          Brook and Corey exponent,EN               --          CONSTANT        0.000     -999.       0.000       10.0
          ALFA coefficient                         1/cm         CONSTANT        0.800E-02 -999.       0.000       1.00
          Van Genuchten exponent, ENN               --          CONSTANT         1.09     -999.        1.00       5.00
1

 UNSATURATED ZONE TRANSPORT MODEL PARAMETERS

 Currently Not Used in Multimed  Version 2.0             1
```

```
NTSTPS - Number of time values concentration calc       20
DUMMY  - Not presently used                              1
ISOL   - Type of scheme used in unsaturated zone         1
N      - Stehfest terms or number of increments         18
NTEL   - Points in Lagrangian interpolation              3
NGPTS  - Number of Gauss points                        104
NIT    - Convolution integral segments                   2
IBOUND - Type of boundary condition                      2
ITSGEN - Time values generated or input                  1
TMAX   - Max simulation time             --            0.0
WTFUN  - Weighting factor                --            1.2
Used only for Numerical Model            --            0.0
Used only for Numerical Model            --            0.0
Used only for Numerical Model            --            0.0
Used only for Numerical Model            --            0.0
Used only for Numerical Model            --            0.0


OPTIONS CHOSEN
------- ------
Analytical unsaturated zone model
Stehfest numerical inversion algorithm
Nondecaying pulse source
Computer generated times for computing concentrations
1


                                                DATA FOR MATERIAL  1
                                                ---- --- --------
                                                VADOSE TRANSPORT VARIABLES


          ---------------------------------------------------------------------------------------------------------------
-
                     VARIABLE NAME                UNITS      DISTRIBUTION          PARAMETERS              LIMITS
                                                                                   MEAN     STD DEV      MIN         MAX
          ---------------------------------------------------------------------------------------------------------------
-
          Longitudinal dispersivity of material      m          DERIVED         -999.     -999.       0.100E-02  0.100E+05
          Percent organic matter                    --          CONSTANT         1.34     -999.       0.000       100.
          Bulk density of soil for material         g/cc        CONSTANT         1.30     -999.       0.100E-01   5.00
          Biological decay coefficient            1/yr          CONSTANT        0.000     -999.       0.000      -999.
          Parameter not used by the Analytical Model            CONSTANT        0.000     0.000       0.000      0.000
          Parameter not used by the Analytical Model            CONSTANT        0.000     0.000       0.000      0.000
1
```

CHEMICAL SPECIFIC VARIABLES

VARIABLE NAME	UNITS	DISTRIBUTION	PARAMETERS MEAN	PARAMETERS STD DEV	LIMITS MIN	LIMITS MAX
Solid phase decay coefficient	1/yr	CONSTANT	0.000	-999.	0.000	0.100E+11
Dissolved phase decay coefficient	1/yr	CONSTANT	0.000	-999.	0.000	0.100E+11
Overall chemical decay coefficient	1/yr	CONSTANT	0.000	-999.	0.000	0.100E+11
Acid catalyzed hydrolysis rate	l/M-yr	CONSTANT	0.000	-999.	0.000	-999.
Neutral hydrolysis rate constant	1/yr	CONSTANT	0.000	-999.	0.000	-999.
Base catalyzed hydrolysis rate	l/M-yr	CONSTANT	0.000	-999.	0.000	-999.
Reference temperature	C	CONSTANT	25.0	-999.	0.000	100.
Normalized distribution coefficient	ml/g	CONSTANT	0.000	-999.	0.000	-999.
Distribution coefficient	--	DERIVED	-999.	-999.	0.000	0.100E+11
Biodegradation coefficient (sat. zone)	1/yr	CONSTANT	0.000	-999.	0.000	-999.
Air diffusion coefficient	cm2/s	CONSTANT	0.000	-999.	0.000	10.0
Reference temperature for air diffusion	C	CONSTANT	0.000	-999.	0.000	100.
Molecular weight	g/M	CONSTANT	0.000	-999.	0.000	-999.
Mole fraction of solute	--	CONSTANT	0.000	-999.	0.100E-08	1.00
Vapor pressure of solute	mm Hg	CONSTANT	0.000	-999.	0.000	100.
Henry`s law constant	atm-m^3/M	CONSTANT	0.000	-999.	0.100E-09	1.00
Overall 1st order decay sat. zone	1/yr	DERIVED	0.000	0.000	0.000	1.00
Soil/Air Boundary Layer Thickness	cm	CONSTANT	-999.	-999.	0.000	-999.
Not currently used		CONSTANT	-999.	-999.	0.000	1.00

SOURCE SPECIFIC VARIABLES

VARIABLE NAME	UNITS	DISTRIBUTION	PARAMETERS MEAN	PARAMETERS STD DEV	LIMITS MIN	LIMITS MAX
Infiltration rate	m/yr	CONSTANT	0.700E-04	-999.	0.100E-09	0.100E+11
Area of waste disposal unit	m^2	CONSTANT	0.320E+06	-999.	0.100E-01	-999.
Duration of pulse	yr	CONSTANT	0.100E+05	-999.	0.100E-08	-999.
Spread of contaminant source	m	DERIVED	-999.	-999.	0.100E-08	0.100E+11
Recharge rate	m/yr	CONSTANT	0.282E-01	-999.	0.000	0.100E+11
Source decay constant	1/yr	CONSTANT	0.000	-999.	0.000	-999.
Initial concentration at landfill	mg/l	CONSTANT	1.00	-999.	0.000	-999.

Length scale of facility	m	DERIVED	-999.	-999.	0.100E-08	0.100E+11
Width scale of facility	m	DERIVED	-999.	-999.	0.100E-08	0.100E+11
Near field dilution		DERIVED	1.00	0.000	0.000	1.00

1

AQUIFER SPECIFIC VARIABLES

-

VARIABLE NAME	UNITS	DISTRIBUTION	PARAMETERS		LIMITS	
			MEAN	STD DEV	MIN	MAX
Particle diameter	cm	CONSTANT	0.25E-01	-999.	0.100E-08	100.
Aquifer porosity	--	CONSTANT	0.100	-999.	0.100E-08	0.990
Bulk density	g/cc	CONSTANT	2.40	-999.	0.100E-01	5.00
Aquifer thickness	m	CONSTANT	91.4	-999.	0.100E-08	0.100E+06
Source thickness (mixing zone depth)	m	DERIVED	-999.	-999.	0.100E-08	0.100E+06
Conductivity (hydraulic)	m/yr	CONSTANT	50.0	-999.	0.100E-06	0.100E+09
Gradient (hydraulic)		CONSTANT	0.110E-01	-999.	0.100E-07	-999.
Groundwater seepage velocity	m/yr	DERIVED	-999.	-999.	0.100E-09	0.100E+09
Retardation coefficient	--	DERIVED	-999.	-999.	1.00	0.100E+09
Longitudinal dispersivity	m	FUNCTION OF X	-999.	-999.	-999.	-999.
Transverse dispersivity	m	FUNCTION OF X	-999.	-999.	-999.	-999.
Vertical dispersivity	m	FUNCTION OF X	-999.	-999.	-999.	-999.
Temperature of aquifer	C	CONSTANT	25.0	-999.	0.000	100.
pH	--	CONSTANT	7.20	-999.	0.300	14.0
Organic carbon content (fraction)		CONSTANT	0.300E-02	-999.	0.100E-05	1.00
Well distance from site	m	CONSTANT	1.00	-999.	1.00	-999.
Angle off center	degree	CONSTANT	0.000	-999.	0.000	360.
Well vertical distance	m	CONSTANT	0.000	-999.	0.000	1.00

1

TIME	CONCENTRATION
0.100E+02	0.00000E+00
0.200E+02	0.00000E+00
0.300E+02	0.00000E+00
0.400E+02	0.00000E+00
0.500E+02	0.00000E+00
0.600E+02	0.00000E+00
0.700E+02	0.00000E+00
0.800E+02	0.00000E+00
0.900E+02	0.00000E+00

0.100E+03	0.00000E+00
0.150E+03	0.00000E+00
0.200E+03	0.00000E+00
0.250E+03	0.00000E+00
0.300E+03	0.00000E+00
0.350E+03	0.00000E+00
0.400E+03	0.00000E+00
0.450E+03	0.00000E+00
0.500E+03	0.00000E+00
0.550E+03	0.00000E+00
0.600E+03	0.00000E+00
0.650E+03	0.00000E+00
0.700E+03	0.00000E+00
0.750E+03	0.00000E+00
0.800E+03	0.00000E+00
0.850E+03	0.00000E+00
0.900E+03	0.00000E+00
0.950E+03	0.00000E+00
0.100E+04	0.00000E+00
0.105E+04	0.00000E+00
0.110E+04	0.00000E+00
0.115E+04	0.00000E+00
0.120E+04	0.00000E+00
0.125E+04	0.00000E+00
0.130E+04	0.00000E+00
0.135E+04	0.00000E+00
0.140E+04	0.00000E+00
0.145E+04	0.00000E+00
0.150E+04	0.00000E+00
0.155E+04	0.00000E+00
0.160E+04	0.00000E+00
0.165E+04	0.00000E+00
0.170E+04	0.00000E+00
0.175E+04	0.00000E+00
0.180E+04	0.00000E+00
0.185E+04	0.00000E+00
0.190E+04	0.00000E+00
0.195E+04	0.00000E+00
0.200E+04	0.00000E+00
0.205E+04	0.00000E+00
0.210E+04	0.00000E+00
0.215E+04	0.00000E+00
0.220E+04	0.00000E+00
0.225E+04	0.00000E+00
0.230E+04	0.00000E+00

0.235E+04	0.00000E+00
0.240E+04	0.00000E+00
0.245E+04	0.00000E+00
0.250E+04	0.00000E+00
0.255E+04	0.00000E+00
0.260E+04	0.00000E+00
0.265E+04	0.00000E+00
0.270E+04	0.00000E+00
0.275E+04	0.00000E+00
0.280E+04	0.00000E+00
0.285E+04	0.00000E+00
0.290E+04	0.00000E+00
0.295E+04	0.00000E+00
0.300E+04	0.00000E+00
0.305E+04	0.00000E+00
0.310E+04	0.00000E+00
0.315E+04	0.00000E+00
0.320E+04	0.00000E+00
0.325E+04	0.00000E+00
0.400E+04	0.00000E+00
0.500E+04	0.56928E-04
0.600E+04	0.30238E-03
0.700E+04	0.85857E-03
0.800E+04	0.14969E-02
0.900E+04	0.20513E-02
0.100E+05	0.24430E-02

```
1
                    U. S.   E N V I R O N M E N T A L   P R O T E C T I O N   A G E N C Y

                                E X P O S U R E   A S S E S S M E N T

                                  M U L T I M E D I A   M O D E L

                              MULTIMED - (Version 2.00 Beta - October 1996)
1
 Run options
 --- -------



 DEFAULT


 DEL RIO LF VERTICAL EXPAN
 Chemical simulated is DEFAULT CHEMICAL


 Option Chosen                        Saturated and unsaturated zone models
 Run was                              DETERMIN
 Infiltration input by user
 Run was transient
 Reject runs if Y coordinate outside plume
 Reject runs if Z coordinate outside plume
 Gaussian source used in saturated zone model
1
1
 UNSATURATED ZONE FLOW MODEL PARAMETERS
 (input parameter description and value)
 NP      - Total number of nodal points                240
 NMAT    - Number of different porous materials          1
 KPROP   - Van Genuchten or Brooks and Corey             1
 IMSHGN  - Spatial discretization option                 1
 NVFLAYR - Number of layers in flow model                1


 OPTIONS CHOSEN
 ------- ------
 Van Genuchten functional coefficients
 User defined coordinate system
1
```

Layer information

LAYER NO.	LAYER THICKNESS	MATERIAL PROPERTY
1	23.80	1

DATA FOR MATERIAL 1

VADOSE ZONE MATERIAL VARIABLES

VARIABLE NAME	UNITS	DISTRIBUTION	PARAMETERS MEAN	STD DEV	LIMITS MIN	MAX
Saturated hydraulic conductivity	cm/hr	CONSTANT	0.720E-03	-999.	0.100E-10	0.100E+05
Unsaturated zone porosity	--	CONSTANT	0.200E-01	-999.	0.100E-08	0.990
Air entry pressure head	m	CONSTANT	0.000	-999.	0.000	-999.
Depth of the unsaturated zone	m	CONSTANT	23.8	-999.	0.100E-08	-999.

DATA FOR MATERIAL 1

VADOSE ZONE FUNCTION VARIABLES

VARIABLE NAME	UNITS	DISTRIBUTION	PARAMETERS MEAN	STD DEV	LIMITS MIN	MAX
Residual water content	--	CONSTANT	0.680E-01	-999.	0.100E-08	1.00
Brook and Corey exponent,EN	--	CONSTANT	0.000	-999.	0.000	10.0
ALFA coefficient	1/cm	CONSTANT	0.800E-02	-999.	0.000	1.00
Van Genuchten exponent, ENN	--	CONSTANT	1.09	-999.	1.00	5.00

1

UNSATURATED ZONE TRANSPORT MODEL PARAMETERS

Currently Not Used in Multimed Version 2.0 1

```
NTSTPS - Number of time values concentration calc       20
DUMMY  - Not presently used                              1
ISOL   - Type of scheme used in unsaturated zone         1
N      - Stehfest terms or number of increments         18
NTEL   - Points in Lagrangian interpolation              3
NGPTS  - Number of Gauss points                        104
NIT    - Convolution integral segments                   2
IBOUND - Type of boundary condition                      2
ITSGEN - Time values generated or input                  1
TMAX   - Max simulation time             --            0.0
WTFUN  - Weighting factor                --            1.2
Used only for Numerical Model            --            0.0
Used only for Numerical Model            --            0.0
Used only for Numerical Model            --            0.0
Used only for Numerical Model            --            0.0
Used only for Numerical Model            --            0.0


OPTIONS CHOSEN
------- ------
Analytical unsaturated zone model
Stehfest numerical inversion algorithm
Nondecaying pulse source
Computer generated times for computing concentrations
1


                                                DATA FOR MATERIAL  1
                                                ---- --- --------
                                                VADOSE TRANSPORT VARIABLES


          ---------------------------------------------------------------------------------------------------------------
-
                     VARIABLE NAME                UNITS      DISTRIBUTION          PARAMETERS              LIMITS
                                                                                  MEAN     STD DEV      MIN         MAX
          ---------------------------------------------------------------------------------------------------------------
-
          Longitudinal dispersivity of material      m          DERIVED         -999.     -999.       0.100E-02  0.100E+05
          Percent organic matter                    --          CONSTANT         1.34     -999.       0.000       100.
          Bulk density of soil for material         g/cc        CONSTANT         1.30     -999.       0.100E-01   5.00
          Biological decay coefficient            1/yr          CONSTANT        0.000     -999.       0.000      -999.
          Parameter not used by the Analytical Model            CONSTANT        0.000     0.000       0.000      0.000
          Parameter not used by the Analytical Model            CONSTANT        0.000     0.000       0.000      0.000
1
```

CHEMICAL SPECIFIC VARIABLES

VARIABLE NAME	UNITS	DISTRIBUTION	PARAMETERS MEAN	PARAMETERS STD DEV	LIMITS MIN	LIMITS MAX
Solid phase decay coefficient	1/yr	CONSTANT	0.000	-999.	0.000	0.100E+11
Dissolved phase decay coefficient	1/yr	CONSTANT	0.000	-999.	0.000	0.100E+11
Overall chemical decay coefficient	1/yr	CONSTANT	0.000	-999.	0.000	0.100E+11
Acid catalyzed hydrolysis rate	l/M-yr	CONSTANT	0.000	-999.	0.000	-999.
Neutral hydrolysis rate constant	1/yr	CONSTANT	0.000	-999.	0.000	-999.
Base catalyzed hydrolysis rate	l/M-yr	CONSTANT	0.000	-999.	0.000	-999.
Reference temperature	C	CONSTANT	25.0	-999.	0.000	100.
Normalized distribution coefficient	ml/g	CONSTANT	0.000	-999.	0.000	-999.
Distribution coefficient	--	DERIVED	-999.	-999.	0.000	0.100E+11
Biodegradation coefficient (sat. zone)	1/yr	CONSTANT	0.000	-999.	0.000	-999.
Air diffusion coefficient	cm2/s	CONSTANT	0.000	-999.	0.000	10.0
Reference temperature for air diffusion	C	CONSTANT	0.000	-999.	0.000	100.
Molecular weight	g/M	CONSTANT	0.000	-999.	0.000	-999.
Mole fraction of solute	--	CONSTANT	0.000	-999.	0.100E-08	1.00
Vapor pressure of solute	mm Hg	CONSTANT	0.000	-999.	0.000	100.
Henry`s law constant	atm-m^3/M	CONSTANT	0.000	-999.	0.100E-09	1.00
Overall 1st order decay sat. zone	1/yr	DERIVED	0.000	0.000	0.000	1.00
Soil/Air Boundary Layer Thickness	cm	CONSTANT	-999.	-999.	0.000	-999.
Not currently used		CONSTANT	-999.	-999.	0.000	1.00

SOURCE SPECIFIC VARIABLES

VARIABLE NAME	UNITS	DISTRIBUTION	PARAMETERS MEAN	PARAMETERS STD DEV	LIMITS MIN	LIMITS MAX
Infiltration rate	m/yr	CONSTANT	0.250E-03	-999.	0.100E-09	0.100E+11
Area of waste disposal unit	m^2	CONSTANT	0.320E+06	-999.	0.100E-01	-999.
Duration of pulse	yr	CONSTANT	0.100E+05	-999.	0.100E-08	-999.
Spread of contaminant source	m	DERIVED	-999.	-999.	0.100E-08	0.100E+11
Recharge rate	m/yr	CONSTANT	0.282E-01	-999.	0.000	0.100E+11
Source decay constant	1/yr	CONSTANT	0.000	-999.	0.000	-999.
Initial concentration at landfill	mg/l	CONSTANT	1.00	-999.	0.000	-999.

Length scale of facility	m	DERIVED	-999.	-999.	0.100E-08	0.100E+11
Width scale of facility	m	DERIVED	-999.	-999.	0.100E-08	0.100E+11
Near field dilution		DERIVED	1.00	0.000	0.000	1.00

1

AQUIFER SPECIFIC VARIABLES

-

VARIABLE NAME	UNITS	DISTRIBUTION	PARAMETERS MEAN	PARAMETERS STD DEV	LIMITS MIN	LIMITS MAX
Particle diameter	cm	CONSTANT	0.25E-01	-999.	0.100E-08	100.
Aquifer porosity	--	CONSTANT	0.100	-999.	0.100E-08	0.990
Bulk density	g/cc	CONSTANT	2.40	-999.	0.100E-01	5.00
Aquifer thickness	m	CONSTANT	91.4	-999.	0.100E-08	0.100E+06
Source thickness (mixing zone depth)	m	DERIVED	-999.	-999.	0.100E-08	0.100E+06
Conductivity (hydraulic)	m/yr	CONSTANT	50.0	-999.	0.100E-06	0.100E+09
Gradient (hydraulic)		CONSTANT	0.110E-01	-999.	0.100E-07	-999.
Groundwater seepage velocity	m/yr	DERIVED	-999.	-999.	0.100E-09	0.100E+09
Retardation coefficient	--	DERIVED	-999.	-999.	1.00	0.100E+09
Longitudinal dispersivity	m	FUNCTION OF X	-999.	-999.	-999.	-999.
Transverse dispersivity	m	FUNCTION OF X	-999.	-999.	-999.	-999.
Vertical dispersivity	m	FUNCTION OF X	-999.	-999.	-999.	-999.
Temperature of aquifer	C	CONSTANT	25.0	-999.	0.000	100.
pH	--	CONSTANT	7.20	-999.	0.300	14.0
Organic carbon content (fraction)		CONSTANT	0.300E-02	-999.	0.100E-05	1.00
Well distance from site	m	CONSTANT	1.00	-999.	1.00	-999.
Angle off center	degree	CONSTANT	0.000	-999.	0.000	360.
Well vertical distance	m	CONSTANT	0.000	-999.	0.000	1.00

1

TIME	CONCENTRATION
0.100E+02	0.00000E+00
0.200E+02	0.00000E+00
0.300E+02	0.00000E+00
0.400E+02	0.00000E+00
0.500E+02	0.00000E+00
0.600E+02	0.00000E+00
0.700E+02	0.00000E+00
0.800E+02	0.00000E+00
0.900E+02	0.00000E+00

0.100E+03	0.00000E+00
0.150E+03	0.00000E+00
0.200E+03	0.00000E+00
0.250E+03	0.00000E+00
0.300E+03	0.00000E+00
0.350E+03	0.00000E+00
0.400E+03	0.00000E+00
0.450E+03	0.00000E+00
0.500E+03	0.00000E+00
0.550E+03	0.00000E+00
0.600E+03	0.00000E+00
0.650E+03	0.00000E+00
0.700E+03	0.00000E+00
0.750E+03	0.00000E+00
0.800E+03	0.00000E+00
0.850E+03	0.00000E+00
0.900E+03	0.00000E+00
0.950E+03	0.00000E+00
0.100E+04	0.00000E+00
0.105E+04	0.00000E+00
0.110E+04	0.00000E+00
0.115E+04	0.00000E+00
0.120E+04	0.00000E+00
0.125E+04	0.95423E-05
0.130E+04	0.17656E-03
0.135E+04	0.34357E-03
0.140E+04	0.51059E-03
0.145E+04	0.67760E-03
0.150E+04	0.84461E-03
0.155E+04	0.10116E-02
0.160E+04	0.12263E-02
0.165E+04	0.16225E-02
0.170E+04	0.20186E-02
0.175E+04	0.24148E-02
0.180E+04	0.28110E-02
0.185E+04	0.32071E-02
0.190E+04	0.36261E-02
0.195E+04	0.40682E-02
0.200E+04	0.45103E-02
0.205E+04	0.49524E-02
0.210E+04	0.53945E-02
0.215E+04	0.56749E-02
0.220E+04	0.58978E-02
0.225E+04	0.61206E-02
0.230E+04	0.63435E-02

0.235E+04	0.65663E-02
0.240E+04	0.67892E-02
0.245E+04	0.70120E-02
0.250E+04	0.72349E-02
0.255E+04	0.74577E-02
0.260E+04	0.76805E-02
0.265E+04	0.79034E-02
0.270E+04	0.81262E-02
0.275E+04	0.83491E-02
0.280E+04	0.85719E-02
0.285E+04	0.87948E-02
0.290E+04	0.90176E-02
0.295E+04	0.92405E-02
0.300E+04	0.94633E-02
0.305E+04	0.96862E-02
0.310E+04	0.99090E-02
0.315E+04	0.99771E-02
0.320E+04	0.99901E-02
0.325E+04	0.10003E-01
0.400E+04	0.10198E-01
0.500E+04	0.10171E-01
0.600E+04	0.10174E-01
0.700E+04	0.10193E-01
0.800E+04	0.10203E-01
0.900E+04	0.10205E-01
0.100E+05	0.10203E-01

```
1
                    U. S.   E N V I R O N M E N T A L   P R O T E C T I O N   A G E N C Y

                                E X P O S U R E   A S S E S S M E N T

                                  M U L T I M E D I A   M O D E L

                              MULTIMED - (Version 2.00 Beta - October 1996)
1
 Run options
 --- -------



 DEFAULT


 DEL RIO LF VERTICAL EXPAN
 Chemical simulated is DEFAULT CHEMICAL


 Option Chosen                        Saturated and unsaturated zone models
 Run was                              DETERMIN
 Infiltration input by user
 Run was transient
 Reject runs if Y coordinate outside plume
 Reject runs if Z coordinate outside plume
 Gaussian source used in saturated zone model
1
1
 UNSATURATED ZONE FLOW MODEL PARAMETERS
 (input parameter description and value)
 NP      - Total number of nodal points                240
 NMAT    - Number of different porous materials          1
 KPROP   - Van Genuchten or Brooks and Corey             1
 IMSHGN  - Spatial discretization option                 1
 NVFLAYR - Number of layers in flow model                1


 OPTIONS CHOSEN
 ------- ------
 Van Genuchten functional coefficients
 User defined coordinate system
1
```

```
Layer information
-----------------
LAYER NO.    LAYER THICKNESS     MATERIAL PROPERTY
---------    ---------------     -----------------
    1                 23.80             1


                                                DATA FOR MATERIAL  1
                                                ---- --- --------
                                            VADOSE ZONE MATERIAL VARIABLES


          ----------------------------------------------------------------------------------------------------------------
-
                     VARIABLE NAME                UNITS      DISTRIBUTION          PARAMETERS              LIMITS
                                                                                  MEAN     STD DEV      MIN         MAX
          ----------------------------------------------------------------------------------------------------------------
-
          Saturated hydraulic conductivity          cm/hr       CONSTANT        0.720E-03 -999.       0.100E-10  0.100E+05
          Unsaturated zone porosity                 --          CONSTANT        0.200E-01 -999.       0.100E-08  0.990
          Air entry pressure head                   m           CONSTANT        0.000     -999.       0.000      -999.
          Depth of the unsaturated zone             m           CONSTANT         23.8     -999.       0.100E-08  -999.


                                                DATA FOR MATERIAL  1
                                                ---- --- --------
                                            VADOSE ZONE FUNCTION VARIABLES


          ----------------------------------------------------------------------------------------------------------------
-
                     VARIABLE NAME                UNITS      DISTRIBUTION          PARAMETERS              LIMITS
                                                                                  MEAN     STD DEV      MIN         MAX
          ----------------------------------------------------------------------------------------------------------------
-
          Residual water content                    --          CONSTANT        0.680E-01 -999.       0.100E-08   1.00
          Brook and Corey exponent,EN               --          CONSTANT        0.000     -999.       0.000       10.0
          ALFA coefficient                         1/cm         CONSTANT        0.800E-02 -999.       0.000       1.00
          Van Genuchten exponent, ENN               --          CONSTANT         1.09     -999.        1.00       5.00
1

 UNSATURATED ZONE TRANSPORT MODEL PARAMETERS

 Currently Not Used in Multimed  Version 2.0             1
```

```
NTSTPS - Number of time values concentration calc       20
DUMMY  - Not presently used                              1
ISOL   - Type of scheme used in unsaturated zone         1
N      - Stehfest terms or number of increments         18
NTEL   - Points in Lagrangian interpolation              3
NGPTS  - Number of Gauss points                        104
NIT    - Convolution integral segments                   2
IBOUND - Type of boundary condition                      2
ITSGEN - Time values generated or input                  1
TMAX   - Max simulation time             --            0.0
WTFUN  - Weighting factor                --            1.2
Used only for Numerical Model            --            0.0
Used only for Numerical Model            --            0.0
Used only for Numerical Model            --            0.0
Used only for Numerical Model            --            0.0
Used only for Numerical Model            --            0.0


OPTIONS CHOSEN
------- ------
Analytical unsaturated zone model
Stehfest numerical inversion algorithm
Nondecaying pulse source
Computer generated times for computing concentrations
1


                                                DATA FOR MATERIAL  1
                                                ---- --- --------
                                                VADOSE TRANSPORT VARIABLES


          ----------------------------------------------------------------------------------------------------------------
-
                     VARIABLE NAME                UNITS      DISTRIBUTION          PARAMETERS              LIMITS
                                                                                   MEAN     STD DEV      MIN         MAX
          ----------------------------------------------------------------------------------------------------------------
-
          Longitudinal dispersivity of material      m          DERIVED         -999.     -999.       0.100E-02  0.100E+05
          Percent organic matter                    --          CONSTANT         1.34     -999.       0.000       100.
          Bulk density of soil for material         g/cc        CONSTANT         1.30     -999.       0.100E-01   5.00
          Biological decay coefficient            1/yr          CONSTANT        0.000     -999.       0.000      -999.
          Parameter not used by the Analytical Model            CONSTANT        0.000     0.000       0.000      0.000
          Parameter not used by the Analytical Model            CONSTANT        0.000     0.000       0.000      0.000
1
```

CHEMICAL SPECIFIC VARIABLES

VARIABLE NAME	UNITS	DISTRIBUTION	PARAMETERS MEAN	PARAMETERS STD DEV	LIMITS MIN	LIMITS MAX
Solid phase decay coefficient	1/yr	CONSTANT	0.000	-999.	0.000	0.100E+11
Dissolved phase decay coefficient	1/yr	CONSTANT	0.000	-999.	0.000	0.100E+11
Overall chemical decay coefficient	1/yr	CONSTANT	0.000	-999.	0.000	0.100E+11
Acid catalyzed hydrolysis rate	l/M-yr	CONSTANT	0.000	-999.	0.000	-999.
Neutral hydrolysis rate constant	1/yr	CONSTANT	0.000	-999.	0.000	-999.
Base catalyzed hydrolysis rate	l/M-yr	CONSTANT	0.000	-999.	0.000	-999.
Reference temperature	C	CONSTANT	25.0	-999.	0.000	100.
Normalized distribution coefficient	ml/g	CONSTANT	0.000	-999.	0.000	-999.
Distribution coefficient	--	DERIVED	-999.	-999.	0.000	0.100E+11
Biodegradation coefficient (sat. zone)	1/yr	CONSTANT	0.000	-999.	0.000	-999.
Air diffusion coefficient	cm2/s	CONSTANT	0.000	-999.	0.000	10.0
Reference temperature for air diffusion	C	CONSTANT	0.000	-999.	0.000	100.
Molecular weight	g/M	CONSTANT	0.000	-999.	0.000	-999.
Mole fraction of solute	--	CONSTANT	0.000	-999.	0.100E-08	1.00
Vapor pressure of solute	mm Hg	CONSTANT	0.000	-999.	0.000	100.
Henry`s law constant	atm-m^3/M	CONSTANT	0.000	-999.	0.100E-09	1.00
Overall 1st order decay sat. zone	1/yr	DERIVED	0.000	0.000	0.000	1.00
Soil/Air Boundary Layer Thickness	cm	CONSTANT	-999.	-999.	0.000	-999.
Not currently used		CONSTANT	-999.	-999.	0.000	1.00

SOURCE SPECIFIC VARIABLES

VARIABLE NAME	UNITS	DISTRIBUTION	PARAMETERS MEAN	PARAMETERS STD DEV	LIMITS MIN	LIMITS MAX
Infiltration rate	m/yr	CONSTANT	0.170E-03	-999.	0.100E-09	0.100E+11
Area of waste disposal unit	m^2	CONSTANT	0.320E+06	-999.	0.100E-01	-999.
Duration of pulse	yr	CONSTANT	0.100E+05	-999.	0.100E-08	-999.
Spread of contaminant source	m	DERIVED	-999.	-999.	0.100E-08	0.100E+11
Recharge rate	m/yr	CONSTANT	0.282	-999.	0.000	0.100E+11
Source decay constant	1/yr	CONSTANT	0.000	-999.	0.000	-999.
Initial concentration at landfill	mg/l	CONSTANT	1.00	-999.	0.000	-999.

Length scale of facility	m	DERIVED	-999.	-999.	0.100E-08	0.100E+11
Width scale of facility	m	DERIVED	-999.	-999.	0.100E-08	0.100E+11
Near field dilution		DERIVED	1.00	0.000	0.000	1.00

1

AQUIFER SPECIFIC VARIABLES

-

VARIABLE NAME	UNITS	DISTRIBUTION	PARAMETERS		LIMITS	
			MEAN	STD DEV	MIN	MAX
Particle diameter	cm	CONSTANT	0.25E-01	-999.	0.100E-08	100.
Aquifer porosity	--	CONSTANT	0.100	-999.	0.100E-08	0.990
Bulk density	g/cc	CONSTANT	2.40	-999.	0.100E-01	5.00
Aquifer thickness	m	CONSTANT	91.4	-999.	0.100E-08	0.100E+06
Source thickness (mixing zone depth)	m	DERIVED	-999.	-999.	0.100E-08	0.100E+06
Conductivity (hydraulic)	m/yr	CONSTANT	50.0	-999.	0.100E-06	0.100E+09
Gradient (hydraulic)		CONSTANT	0.110E-01	-999.	0.100E-07	-999.
Groundwater seepage velocity	m/yr	DERIVED	-999.	-999.	0.100E-09	0.100E+09
Retardation coefficient	--	DERIVED	-999.	-999.	1.00	0.100E+09
Longitudinal dispersivity	m	FUNCTION OF X	-999.	-999.	-999.	-999.
Transverse dispersivity	m	FUNCTION OF X	-999.	-999.	-999.	-999.
Vertical dispersivity	m	FUNCTION OF X	-999.	-999.	-999.	-999.
Temperature of aquifer	C	CONSTANT	25.0	-999.	0.000	100.
pH	--	CONSTANT	7.20	-999.	0.300	14.0
Organic carbon content (fraction)		CONSTANT	0.300E-02	-999.	0.100E-05	1.00
Well distance from site	m	CONSTANT	1.00	-999.	1.00	-999.
Angle off center	degree	CONSTANT	0.000	-999.	0.000	360.
Well vertical distance	m	CONSTANT	0.000	-999.	0.000	1.00

1

TIME	CONCENTRATION
0.100E+02	0.00000E+00
0.200E+02	0.00000E+00
0.300E+02	0.00000E+00
0.400E+02	0.00000E+00
0.500E+02	0.00000E+00
0.600E+02	0.00000E+00
0.700E+02	0.00000E+00
0.800E+02	0.00000E+00
0.900E+02	0.00000E+00

0.100E+03	0.00000E+00
0.150E+03	0.00000E+00
0.200E+03	0.00000E+00
0.250E+03	0.00000E+00
0.300E+03	0.00000E+00
0.350E+03	0.00000E+00
0.400E+03	0.00000E+00
0.450E+03	0.00000E+00
0.500E+03	0.00000E+00
0.550E+03	0.00000E+00
0.600E+03	0.00000E+00
0.650E+03	0.00000E+00
0.700E+03	0.00000E+00
0.750E+03	0.00000E+00
0.800E+03	0.00000E+00
0.850E+03	0.00000E+00
0.900E+03	0.00000E+00
0.950E+03	0.00000E+00
0.100E+04	0.00000E+00
0.105E+04	0.00000E+00
0.110E+04	0.00000E+00
0.115E+04	0.00000E+00
0.120E+04	0.00000E+00
0.125E+04	0.00000E+00
0.130E+04	0.00000E+00
0.135E+04	0.00000E+00
0.140E+04	0.00000E+00
0.145E+04	0.00000E+00
0.150E+04	0.00000E+00
0.155E+04	0.00000E+00
0.160E+04	0.00000E+00
0.165E+04	0.00000E+00
0.170E+04	0.00000E+00
0.175E+04	0.00000E+00
0.180E+04	0.00000E+00
0.185E+04	0.00000E+00
0.190E+04	0.42359E-04
0.195E+04	0.11776E-03
0.200E+04	0.19316E-03
0.205E+04	0.26857E-03
0.210E+04	0.34397E-03
0.215E+04	0.41937E-03
0.220E+04	0.49478E-03
0.225E+04	0.57018E-03
0.230E+04	0.64558E-03

0.235E+04	0.72099E-03
0.240E+04	0.82552E-03
0.245E+04	0.10044E-02
0.250E+04	0.11832E-02
0.255E+04	0.13621E-02
0.260E+04	0.15410E-02
0.265E+04	0.17198E-02
0.270E+04	0.18987E-02
0.275E+04	0.20775E-02
0.280E+04	0.22564E-02
0.285E+04	0.24499E-02
0.290E+04	0.26495E-02
0.295E+04	0.28491E-02
0.300E+04	0.30487E-02
0.305E+04	0.32483E-02
0.310E+04	0.34479E-02
0.315E+04	0.36475E-02
0.320E+04	0.38068E-02
0.325E+04	0.39352E-02
0.400E+04	0.58609E-02
0.500E+04	0.68105E-02
0.600E+04	0.69283E-02
0.700E+04	0.69004E-02
0.800E+04	0.68881E-02
0.900E+04	0.68938E-02
0.100E+05	0.69034E-02

```
1
                    U. S.   E N V I R O N M E N T A L   P R O T E C T I O N   A G E N C Y

                                E X P O S U R E   A S S E S S M E N T

                                  M U L T I M E D I A   M O D E L

                              MULTIMED - (Version 2.00 Beta - October 1996)
1
 Run options
 --- -------



 DEFAULT


 DEL RIO LF VERTICAL EXPAN
 Chemical simulated is DEFAULT CHEMICAL


 Option Chosen                        Saturated and unsaturated zone models
 Run was                              DETERMIN
 Infiltration input by user
 Run was transient
 Reject runs if Y coordinate outside plume
 Reject runs if Z coordinate outside plume
 Gaussian source used in saturated zone model
1
1
 UNSATURATED ZONE FLOW MODEL PARAMETERS
 (input parameter description and value)
 NP      - Total number of nodal points                240
 NMAT    - Number of different porous materials          1
 KPROP   - Van Genuchten or Brooks and Corey             1
 IMSHGN  - Spatial discretization option                 1
 NVFLAYR - Number of layers in flow model                1


 OPTIONS CHOSEN
 ------- ------
 Van Genuchten functional coefficients
 User defined coordinate system
1
```

```
Layer information
-----------------
LAYER NO.    LAYER THICKNESS     MATERIAL PROPERTY
---------    ---------------     -----------------
    1                 23.80             1


                                                DATA FOR MATERIAL  1
                                                ---- --- --------
                                            VADOSE ZONE MATERIAL VARIABLES


          ---------------------------------------------------------------------------------------------------------------
-
                     VARIABLE NAME                UNITS      DISTRIBUTION          PARAMETERS              LIMITS
                                                                                  MEAN     STD DEV      MIN         MAX
          ---------------------------------------------------------------------------------------------------------------
-
          Saturated hydraulic conductivity          cm/hr       CONSTANT        0.720E-03 -999.       0.100E-10  0.100E+05
          Unsaturated zone porosity                 --          CONSTANT        0.200E-01 -999.       0.100E-08  0.990
          Air entry pressure head                   m           CONSTANT        0.000     -999.       0.000      -999.
          Depth of the unsaturated zone             m           CONSTANT         23.8     -999.       0.100E-08  -999.


                                                DATA FOR MATERIAL  1
                                                ---- --- --------
                                            VADOSE ZONE FUNCTION VARIABLES


          ---------------------------------------------------------------------------------------------------------------
-
                     VARIABLE NAME                UNITS      DISTRIBUTION          PARAMETERS              LIMITS
                                                                                  MEAN     STD DEV      MIN         MAX
          ---------------------------------------------------------------------------------------------------------------
-
          Residual water content                    --          CONSTANT        0.680E-01 -999.       0.100E-08   1.00
          Brook and Corey exponent,EN               --          CONSTANT        0.000     -999.       0.000       10.0
          ALFA coefficient                         1/cm         CONSTANT        0.800E-02 -999.       0.000       1.00
          Van Genuchten exponent, ENN               --          CONSTANT         1.09     -999.        1.00       5.00
1

 UNSATURATED ZONE TRANSPORT MODEL PARAMETERS

 Currently Not Used in Multimed  Version 2.0             1
```

```
NTSTPS - Number of time values concentration calc       20
DUMMY  - Not presently used                              1
ISOL   - Type of scheme used in unsaturated zone         1
N      - Stehfest terms or number of increments         18
NTEL   - Points in Lagrangian interpolation              3
NGPTS  - Number of Gauss points                        104
NIT    - Convolution integral segments                   2
IBOUND - Type of boundary condition                      2
ITSGEN - Time values generated or input                  1
TMAX   - Max simulation time             --            0.0
WTFUN  - Weighting factor                --            1.2
Used only for Numerical Model            --            0.0
Used only for Numerical Model            --            0.0
Used only for Numerical Model            --            0.0
Used only for Numerical Model            --            0.0
Used only for Numerical Model            --            0.0


OPTIONS CHOSEN
------- ------
Analytical unsaturated zone model
Stehfest numerical inversion algorithm
Nondecaying pulse source
Computer generated times for computing concentrations
1


                                                DATA FOR MATERIAL  1
                                                ---- --- --------
                                                VADOSE TRANSPORT VARIABLES


          ---------------------------------------------------------------------------------------------------------------
-
                     VARIABLE NAME                UNITS      DISTRIBUTION          PARAMETERS              LIMITS
                                                                                  MEAN     STD DEV      MIN         MAX
          ---------------------------------------------------------------------------------------------------------------
-
          Longitudinal dispersivity of material      m          DERIVED         -999.     -999.       0.100E-02  0.100E+05
          Percent organic matter                    --          CONSTANT         1.34     -999.       0.000       100.
          Bulk density of soil for material         g/cc        CONSTANT         1.30     -999.       0.100E-01   5.00
          Biological decay coefficient            1/yr          CONSTANT        0.000     -999.       0.000      -999.
          Parameter not used by the Analytical Model            CONSTANT        0.000     0.000       0.000      0.000
          Parameter not used by the Analytical Model            CONSTANT        0.000     0.000       0.000      0.000
1
```

CHEMICAL SPECIFIC VARIABLES

VARIABLE NAME	UNITS	DISTRIBUTION	PARAMETERS MEAN	PARAMETERS STD DEV	LIMITS MIN	LIMITS MAX
Solid phase decay coefficient	1/yr	CONSTANT	0.000	-999.	0.000	0.100E+11
Dissolved phase decay coefficient	1/yr	CONSTANT	0.000	-999.	0.000	0.100E+11
Overall chemical decay coefficient	1/yr	CONSTANT	0.000	-999.	0.000	0.100E+11
Acid catalyzed hydrolysis rate	l/M-yr	CONSTANT	0.000	-999.	0.000	-999.
Neutral hydrolysis rate constant	1/yr	CONSTANT	0.000	-999.	0.000	-999.
Base catalyzed hydrolysis rate	l/M-yr	CONSTANT	0.000	-999.	0.000	-999.
Reference temperature	C	CONSTANT	25.0	-999.	0.000	100.
Normalized distribution coefficient	ml/g	CONSTANT	0.000	-999.	0.000	-999.
Distribution coefficient	--	DERIVED	-999.	-999.	0.000	0.100E+11
Biodegradation coefficient (sat. zone)	1/yr	CONSTANT	0.000	-999.	0.000	-999.
Air diffusion coefficient	cm2/s	CONSTANT	0.000	-999.	0.000	10.0
Reference temperature for air diffusion	C	CONSTANT	0.000	-999.	0.000	100.
Molecular weight	g/M	CONSTANT	0.000	-999.	0.000	-999.
Mole fraction of solute	--	CONSTANT	0.000	-999.	0.100E-08	1.00
Vapor pressure of solute	mm Hg	CONSTANT	0.000	-999.	0.000	100.
Henry`s law constant	atm-m^3/M	CONSTANT	0.000	-999.	0.100E-09	1.00
Overall 1st order decay sat. zone	1/yr	DERIVED	0.000	0.000	0.000	1.00
Soil/Air Boundary Layer Thickness	cm	CONSTANT	-999.	-999.	0.000	-999.
Not currently used		CONSTANT	-999.	-999.	0.000	1.00

SOURCE SPECIFIC VARIABLES

VARIABLE NAME	UNITS	DISTRIBUTION	PARAMETERS MEAN	PARAMETERS STD DEV	LIMITS MIN	LIMITS MAX
Infiltration rate	m/yr	CONSTANT	0.170E-03	-999.	0.100E-09	0.100E+11
Area of waste disposal unit	m^2	CONSTANT	0.320E+06	-999.	0.100E-01	-999.
Duration of pulse	yr	CONSTANT	0.100E+05	-999.	0.100E-08	-999.
Spread of contaminant source	m	DERIVED	-999.	-999.	0.100E-08	0.100E+11
Recharge rate	m/yr	CONSTANT	0.282E-02	-999.	0.000	0.100E+11
Source decay constant	1/yr	CONSTANT	0.000	-999.	0.000	-999.
Initial concentration at landfill	mg/l	CONSTANT	1.00	-999.	0.000	-999.

Length scale of facility	m	DERIVED	-999.	-999.	0.100E-08	0.100E+11
Width scale of facility	m	DERIVED	-999.	-999.	0.100E-08	0.100E+11
Near field dilution		DERIVED	1.00	0.000	0.000	1.00

1

AQUIFER SPECIFIC VARIABLES

-

VARIABLE NAME	UNITS	DISTRIBUTION	PARAMETERS MEAN	PARAMETERS STD DEV	LIMITS MIN	LIMITS MAX
Particle diameter	cm	CONSTANT	0.25E-01	-999.	0.100E-08	100.
Aquifer porosity	--	CONSTANT	0.100	-999.	0.100E-08	0.990
Bulk density	g/cc	CONSTANT	2.40	-999.	0.100E-01	5.00
Aquifer thickness	m	CONSTANT	91.4	-999.	0.100E-08	0.100E+06
Source thickness (mixing zone depth)	m	DERIVED	-999.	-999.	0.100E-08	0.100E+06
Conductivity (hydraulic)	m/yr	CONSTANT	50.0	-999.	0.100E-06	0.100E+09
Gradient (hydraulic)		CONSTANT	0.110E-01	-999.	0.100E-07	-999.
Groundwater seepage velocity	m/yr	DERIVED	-999.	-999.	0.100E-09	0.100E+09
Retardation coefficient	--	DERIVED	-999.	-999.	1.00	0.100E+09
Longitudinal dispersivity	m	FUNCTION OF X	-999.	-999.	-999.	-999.
Transverse dispersivity	m	FUNCTION OF X	-999.	-999.	-999.	-999.
Vertical dispersivity	m	FUNCTION OF X	-999.	-999.	-999.	-999.
Temperature of aquifer	C	CONSTANT	25.0	-999.	0.000	100.
pH	--	CONSTANT	7.20	-999.	0.300	14.0
Organic carbon content (fraction)		CONSTANT	0.300E-02	-999.	0.100E-05	1.00
Well distance from site	m	CONSTANT	1.00	-999.	1.00	-999.
Angle off center	degree	CONSTANT	0.000	-999.	0.000	360.
Well vertical distance	m	CONSTANT	0.000	-999.	0.000	1.00

1

TIME	CONCENTRATION
0.100E+02	0.00000E+00
0.200E+02	0.00000E+00
0.300E+02	0.00000E+00
0.400E+02	0.00000E+00
0.500E+02	0.00000E+00
0.600E+02	0.00000E+00
0.700E+02	0.00000E+00
0.800E+02	0.00000E+00
0.900E+02	0.00000E+00

0.100E+03	0.00000E+00
0.150E+03	0.00000E+00
0.200E+03	0.00000E+00
0.250E+03	0.00000E+00
0.300E+03	0.00000E+00
0.350E+03	0.00000E+00
0.400E+03	0.00000E+00
0.450E+03	0.00000E+00
0.500E+03	0.00000E+00
0.550E+03	0.00000E+00
0.600E+03	0.00000E+00
0.650E+03	0.00000E+00
0.700E+03	0.00000E+00
0.750E+03	0.00000E+00
0.800E+03	0.00000E+00
0.850E+03	0.00000E+00
0.900E+03	0.00000E+00
0.950E+03	0.00000E+00
0.100E+04	0.00000E+00
0.105E+04	0.00000E+00
0.110E+04	0.00000E+00
0.115E+04	0.00000E+00
0.120E+04	0.00000E+00
0.125E+04	0.00000E+00
0.130E+04	0.00000E+00
0.135E+04	0.00000E+00
0.140E+04	0.00000E+00
0.145E+04	0.00000E+00
0.150E+04	0.00000E+00
0.155E+04	0.00000E+00
0.160E+04	0.00000E+00
0.165E+04	0.00000E+00
0.170E+04	0.00000E+00
0.175E+04	0.00000E+00
0.180E+04	0.00000E+00
0.185E+04	0.00000E+00
0.190E+04	0.42595E-04
0.195E+04	0.11842E-03
0.200E+04	0.19424E-03
0.205E+04	0.27006E-03
0.210E+04	0.34589E-03
0.215E+04	0.42171E-03
0.220E+04	0.49753E-03
0.225E+04	0.57335E-03
0.230E+04	0.64918E-03

0.235E+04	0.72500E-03
0.240E+04	0.83011E-03
0.245E+04	0.10100E-02
0.250E+04	0.11898E-02
0.255E+04	0.13697E-02
0.260E+04	0.15495E-02
0.265E+04	0.17294E-02
0.270E+04	0.19092E-02
0.275E+04	0.20891E-02
0.280E+04	0.22689E-02
0.285E+04	0.24636E-02
0.290E+04	0.26643E-02
0.295E+04	0.28650E-02
0.300E+04	0.30657E-02
0.305E+04	0.32664E-02
0.310E+04	0.34671E-02
0.315E+04	0.36678E-02
0.320E+04	0.38280E-02
0.325E+04	0.39571E-02
0.400E+04	0.58935E-02
0.500E+04	0.68484E-02
0.600E+04	0.69669E-02
0.700E+04	0.69388E-02
0.800E+04	0.69265E-02
0.900E+04	0.69322E-02
0.100E+05	0.69419E-02